NEW CASTLE
BUILDING PRODUCTS

NCBPMetalRoofing.com
Email: MetalSales@ncbp.com

Glossary

Page 1.....Terms
Page 2.....Line Card
Page 3.....Metal Stock Sheet
Page 4.....Drip Edge
Page 5.....Gravel Stop
Page 6 .....Coping Option 1
Page 7.....Coping Option 2
Page 8.....Coping Option 3
Page 9.....Reglet
Page 10.....Box Gutter
Page 11.....Box Leader
Page 12.....Scupper 1
Page 13.....U-Style Scupper
Page 14.....Gutter HD
Page 16.....Gutter LT
Page 18.....Drip Edge
Page 20.....Econo Coping
Page 22.....Fascia Cover HD
Page 24.....Fascia Cover LT
Page 26.....Fascia Extender
Page 28.....Econo Gravel Stop
Page 30.....Gravel Stop Standard
Page 32.....Snap Gravel Stop LT
Page 34.....Spring-Tite Coping
Page 36.....Spring-Tite Coping EZ
Page 38.....Spring-Tite LT
Page 40.....Custom Order Edging Form

NEW CASTLE METAL

Definitions

Term's	Definition
Open Hem	Hem will be left open @ 34°, hem will be locked on material in field
Locking Hem	Hem will be left open to allow single layer of material to be interlocked, does not require further manipulation of material in the field
Closed Hem	Hem will be completely closed and crushed
Kick	Refers to the portion coming off the vertical length for water drip
Cleat	Base metal that will be fastened to the nailer allowing the exposed metal to be secured to the building without exposed fastening.
Anchor Cleat	Cleat that spans 1 LF, installed 5ft on center, reducing the overall material required
Continuous Cleat	Cleat that spans 10LF, entire piece of exposed metal will be cleated. Also referred to as "fully cleated"
Riveted	Materials will be joined together by pop rivets, allowing 2 or more pieces to be conjoined without hemming or welding the material.
Pitch	Refers to the angle above 90 that the roof slopes. (i.e. a 6:12 pitch is equal to 26.5° over the 90° bend.
Concealed Splice Plate	6" wide splice plate used to span the joint between 2 consecutive pieces, installed beneath the main exposed metal
Over Splice Plate	6" wide splice plate used to span the joint between 2 consecutive pieces, installed over the main metal with an open hem.

NEW CASTLE BUILDING PRODUCTS

CUSTOM FABRICATION

- Copings - Gravel Stops
- Leader Heads (Galvanized Copper or Aluminum)
- Copper Wall Vents
- Copper Dryer Vents
- Scuppers
- Pitch Pocket
- Flanged Tubes

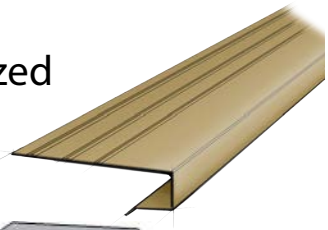

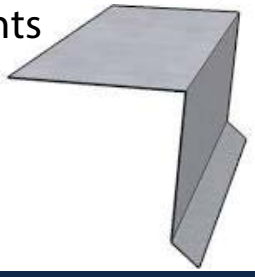
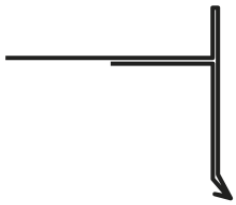

SHEET METAL

- Copper
- Lead Coated Copper
- Freedom Grey
- Aluminum (Painted, Kynar, Anodized, & Mill Finish)
- Galvanized Kynar & Mill Finish

LEAD

- Lead
  - Sheets & Rolls (2 ¼, 3 or 4 lbs.)
  - Various Sizes
- Wedges
- Lead Pipe Boots

SOLDER

- Solder (50/50, 60/40)
  - Available in ¼, ½ & 1lb. Bars
- Flux
- Acid Brushes
- Iron Tips
- Sal Ammoniac
- Patina Solution
- Muriatic Acid

EQUIPMENT

- Acetylene Torch / Soldering Torch
- Regulator
- Hoses
- Snips
- Copper Shrinkers
- Diamond Blades
- Pop Rivet Gun

NEW CASTLE METAL

Metal Stock Card

Flat Stock				
TYPE	**AVAIL. SIZES**	**THICKNESS/ GAUGE/ WEIGHT**	**STOCK FINISHES**	
Rhienzinc	39.4" x 10'	7mm	Graphite Gray & Rheinzinc	8mm thickness
Copper Sheets	3' x 8' & 3' x 10'	16oz & 20oz	X	4' x 8' & 4' x 10'
Lead Coated Copper	3' x 8' & 3' x 10'	16oz & 20oz	X	
Freedom Gray	3' x 8' & 3' x 10'	16oz & 20oz	X	
UnaClad Kynar	4' x 8' & 4' x 10'	.032; .040; .050	Almond; Mansard Brown; Sierra Tan; Slate Gray; Stone White; Terracotta; Bone White; Dark Bronze; Cityscape;	Ask for color chart to see additional colors and thicknesses/ substrates available.
PAC-clad Kynar	4' x 8' & 4' x 10'	.032; .040; .050	Bone White; Almond; Dark Bronze; Mansard Brown; Sierra Tan; Stone White	Ask for color chart to see additional colors and thicknesses/ substrates available.
New Castle Kynar	4' x 10'	.032; .040	Bone White; Sierra Tan; Sandstone; Regal White; Dark Bronze; Medium Bronze; Bright Silver; Pre-Weathered Galvalume; Forest Green; Charcoal Gray; Dove Gray; Metallic Copper; Matte Black; Slate Gray	Ask for color chart to see additional colors and thicknesses/ substrates available.
Painted Aluminum (Baked on Enamel)	4' x 8' & 4' x 10'	.025; .032; .040; .050	Bronze over White; Matte Black over White; White over White	
Mill Finish Aluminum	4' x 8' & 4' x 10'	.025; .032; .040; .050	X	
Anodized Aluminum	4' x 8' & 4' x 10'	.032; .040; .050	Clear Anodized	Colored Anodized
Galvanized Steel	4' x 8' & 4' x 10'	26ga; 24ga; 22ga; 18ga	X	
Stainless Steel	4' x 8' & 4' x 10'	26ga; 24ga; 22ga	X	304-2b; Polished
ROLLED METAL				
TYPE	**AVAIL. SIZES**	**THICKNESS/ GAUGE/ WEIGHT**	**STOCK FINISHES**	**Special Order Options**
Copper	18" ; 20"; 24"	16oz & 20oz	X	
Lead Coated Copper	18" & 20"	16oz	X	20oz and custom sizes
Lead sheet/rolls	Various sizes	2.5lbs; 3lbs; 4lbs	X	
New Castle Kynar	20"	.032	See colors listed above	Ask for color chart to see additional colors and thicknesses/ substrates available
TPO/ PVC Coated Metal				
TYPE	**AVAIL. SIZES**	**THICKNESS/ GAUGE/ WEIGHT**	**STOCK FINISHES**	**Special Order Options**
Firestone; Johns Manville; GAF; Sarnafil	4' x 10'	24ga	White & Gray	

In stock at a New Castle Branch near you!

Drip Edge Print Approval

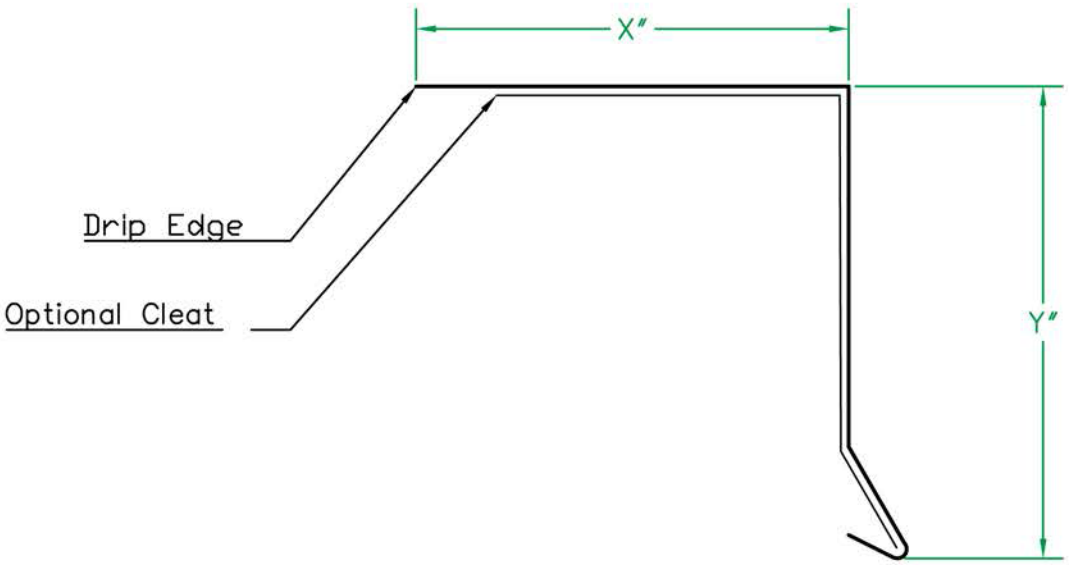

MATERIAL:

- ☐ .032" ALUM.
- ☐ .040" ALUM.
- ☐ .050" ALUM.
- ☐ 16 OZ. COPPER
- ☐ 20 OZ. COPPER
- ☐ 24 GA STEEL
- ☐ OTHER: _____

FINISH: _____

COLOR: _____

MEASUREMENTS:

"X": _____

"Y": _____

QUANTITIES:

LINEAL FEET (10'–0" LENGTHS): _____

INSIDE MITER*: _____

OUTSIDE MITER*: _____

* STANDARD RIVETED

PRINT APPROVAL:

ARCHITECTS AND/OR CONTRACTOR SHALL VERIFY ALL DIMENSIONS, SIZES, AND QUANTITIES. FABRICATION WILL NOT BEGIN UNTIL RECEIPT OF SIGNED PRINT APPROVAL

SIGNATURE:

DATE:

PROJECT:

CONTRACTOR:

ARCHITECT:

REPRESENTATIVE:

New Castle Metals
600 West John Street
Hicksville, NY 11801

PHONE: (516) 207-7708

EMAIL: METALSALES@NCBP.COM

Gravel Stop Print Approval

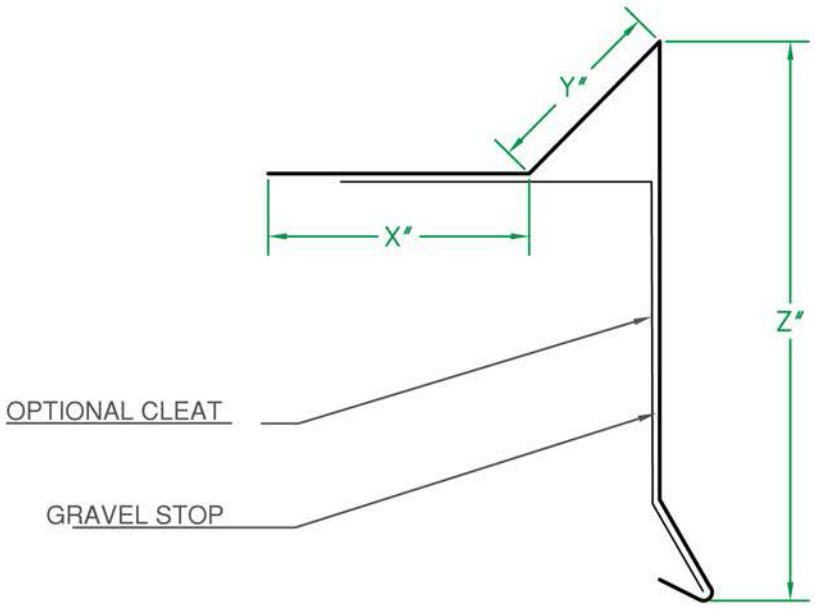

MATERIAL:

- ☐ .032" ALUM.
- ☐ .040" ALUM.
- ☐ .050" ALUM.
- ☐ 16 OZ. COPPER
- ☐ 20 OZ. COPPER
- ☐ 24 GA STEEL
- ☐ OTHER: _____

FINISH: _____

COLOR: _____

MEASUREMENTS:

"X": _____

"Y": _____

"Z": _____

QUANTITIES:

LINEAL FEET (10'–0" LENGTHS): _____

INSIDE MITER*: _____

OUTSIDE MITER*: _____

* STANDARD RIVETED

PRINT APPROVAL:

ARCHITECTS AND/OR CONTRACTOR SHALL VERIFY ALL DIMENSIONS, SIZES, AND QUANTITIES. FABRICATION WILL NOT BEGIN UNTIL RECEIPT OF SIGNED PRINT APPROVAL

SIGNATURE:

DATE:

PROJECT:

CONTRACTOR:

ARCHITECT:

REPRESENTATIVE:

New Castle Metals
600 West John Street
Hicksville, NY 11801

PHONE: (516) 207-7708
EMAIL: METALSALES@NCBP.COM

Coping Option 1 Print Approval

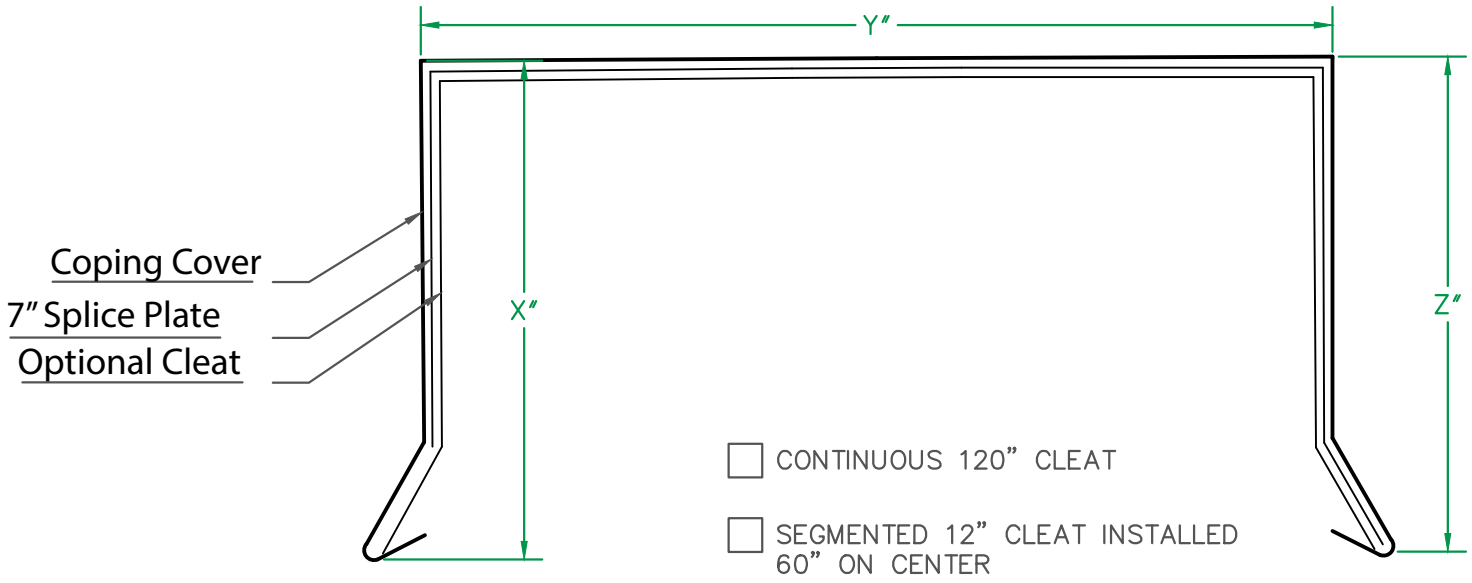

MATERIAL:

- ☐ .032" ALUM.
- ☐ .040" ALUM.
- ☐ .050" ALUM.
- ☐ 16 OZ. COPPER
- ☐ 20 OZ. COPPER
- ☐ 24 GA STEEL
- ☐ OTHER: _____

FINISH: _____

COLOR: _____

MEASUREMENTS:

"X": _____

"Y": _____ (Parapet + 1/8")

"Z": _____

QUANTITIES:

LINEAL FEET (10'–0" LENGTHS): _____

INSIDE MITER*: _____

OUTSIDE MITER*: _____

* STANDARD RIVETED

PRINT APPROVAL:

ARCHITECTS AND/OR CONTRACTOR SHALL VERIFY ALL DIMENSIONS, SIZES, AND QUANTITIES. FABRICATION WILL NOT BEGIN UNTIL RECEIPT OF SIGNED PRINT APPROVAL

SIGNATURE:

DATE:

PROJECT:

CONTRACTOR:

ARCHITECT:

REPRESENTATIVE:

New Castle Metals
600 West John Street
Hicksville, NY 11801

PHONE: (516) 207-7708
EMAIL: METALSALES@NCBP.COM

Coping Option 2 Print Approval

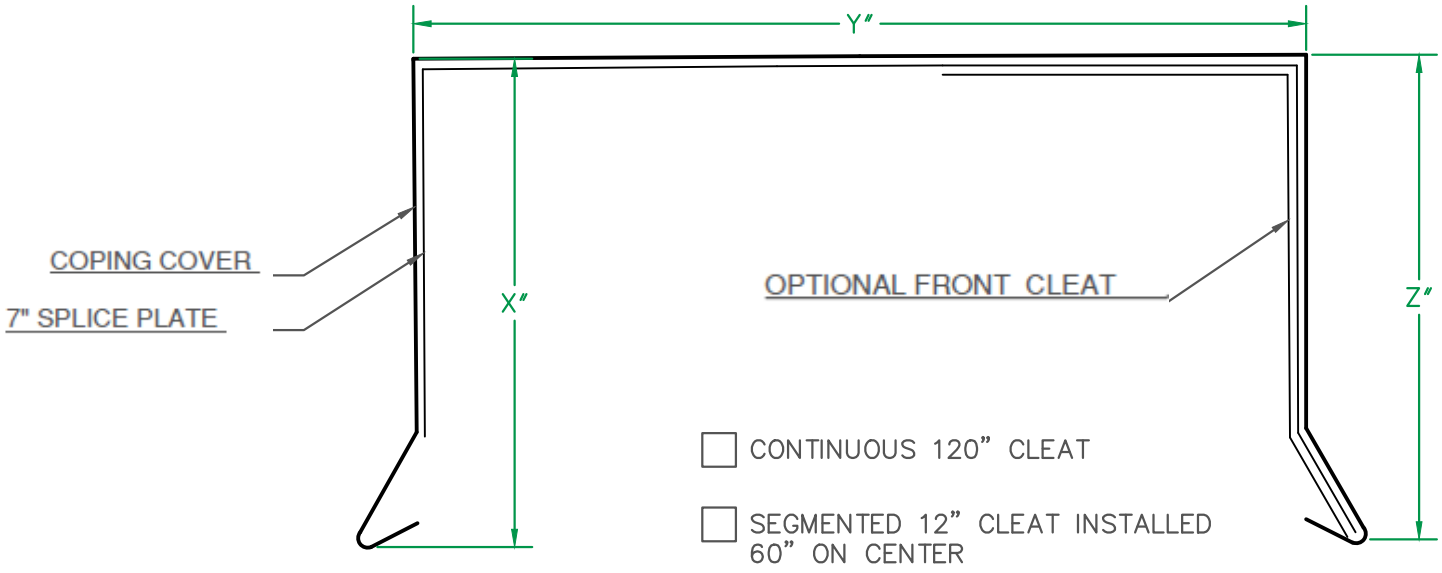

MATERIAL:

- ☐ .032" ALUM.
- ☐ .040" ALUM.
- ☐ .050" ALUM.
- ☐ 16 OZ. COPPER
- ☐ 20 OZ. COPPER
- ☐ 24 GA STEEL
- ☐ OTHER: _____

FINISH: _____

COLOR: _____

PRINT APPROVAL:

ARCHITECTS AND/OR CONTRACTOR SHALL VERIFY ALL DIMENSIONS, SIZES, AND QUANTITIES. FABRICATION WILL NOT BEGIN UNTIL RECEIPT OF SIGNED PRINT APPROVAL

SIGNATURE:

DATE:

PROJECT:

CONTRACTOR:

ARCHITECT:

REPRESENTATIVE:

MEASUREMENTS:

"X": _____

"Y": _____ (Parapet + 1/8")

"Z": _____

QUANTITIES:

LINEAL FEET (10'–0" LENGTHS): _____

INSIDE MITER*: _____

OUTSIDE MITER*: _____

* STANDARD RIVETED

New Castle Metals
600 West John Street
Hicksville, NY 11801

PHONE: (516) 207-7708
EMAIL: METALSALES@NCBP.COM

Coping Option 3 Print Approval

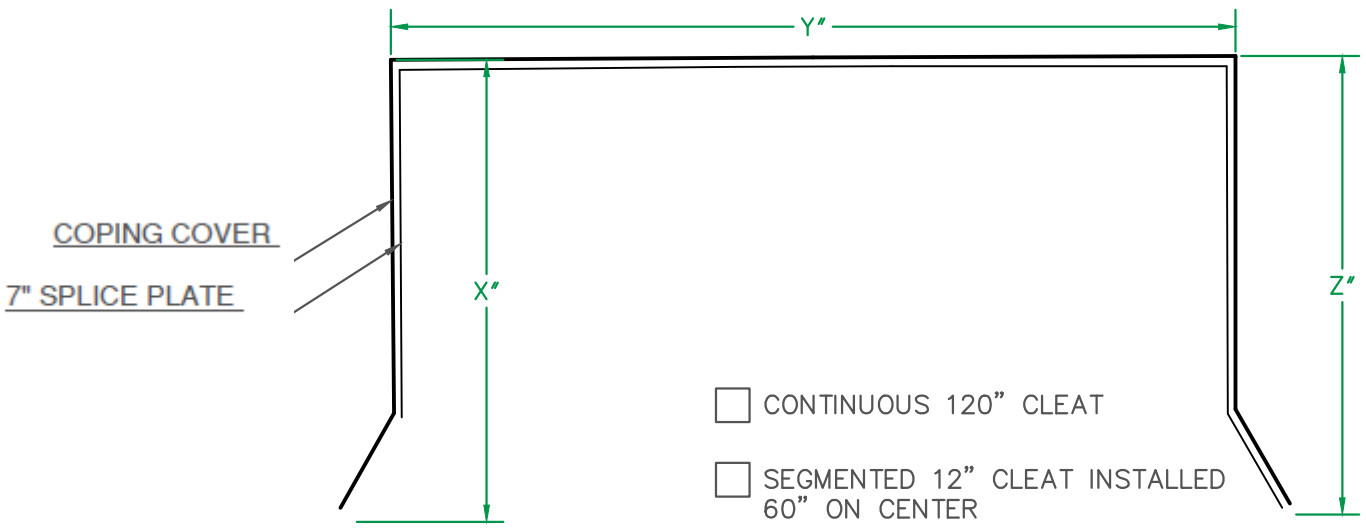

MATERIAL:

- ☐ .032" ALUM.
- ☐ .040" ALUM.
- ☐ .050" ALUM.
- ☐ 16 OZ. COPPER
- ☐ 20 OZ. COPPER
- ☐ 24 GA STEEL
- ☐ OTHER: _____

FINISH: _____

COLOR: _____

MEASUREMENTS:

"X": _____

"Y": _____ (Parapet + 1/8")

"Z": _____

QUANTITIES:

LINEAL FEET (10'–0" LENGTHS): _____

INSIDE MITER*: _____

OUTSIDE MITER*: _____

* STANDARD RIVETED

PRINT APPROVAL:

ARCHITECTS AND/OR CONTRACTOR SHALL VERIFY ALL DIMENSIONS, SIZES, AND QUANTITIES. FABRICATION WILL NOT BEGIN UNTIL RECEIPT OF SIGNED PRINT APPROVAL

SIGNATURE:

DATE:

PROJECT:

CONTRACTOR:

ARCHITECT:

REPRESENTATIVE:

New Castle Metals
600 West John Street
Hicksville, NY 11801

PHONE: (516) 207-7708

EMAIL: METALSALES@NCBP.COM

Counter Flashing Print Approval

☐ Two–Peice Counter Flashing

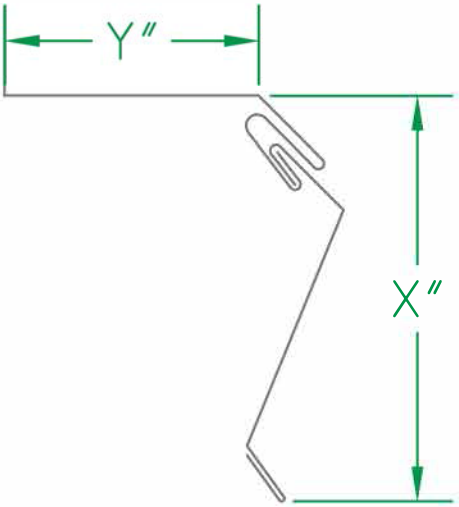

☐ One–Peice Counter Flashing

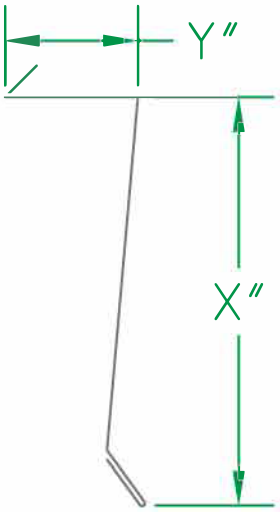

☐ Surface Mounted "Counter" Flashing

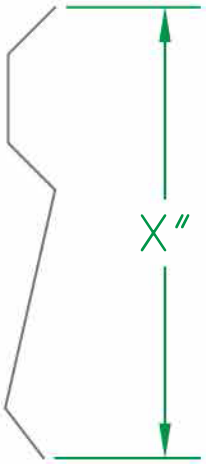

MATERIAL:

☐ .032" ALUM. ☐ 16 OZ. COPPER

☐ .040" ALUM. ☐ 20 OZ. COPPER

☐ .050" ALUM. ☐ 24 GA STEEL

☐ OTHER: _____

FINISH: _____

COLOR: _____

MEASUREMENTS:

"X": _____

"Y": _____

"Z": _____

QUANTITIES:

LINEAL FEET (10'–0" LENGTHS): _____

INSIDE MITER*: _____

OUTSIDE MITER*: _____

* STANDARD RIVETED

PRINT APPROVAL:

ARCHITECTS AND/OR CONTRACTOR SHALL VERIFY ALL DIMENSIONS, SIZES, AND QUANTITIES. FABRICATION WILL NOT BEGIN UNTIL RECEIPT OF SIGNED PRINT APPROVAL

SIGNATURE:

DATE:

PROJECT:

CONTRACTOR:

ARCHITECT:

REPRESENTATIVE:

New Castle Metals
600 West John Street
Hicksville, NY 11801

PHONE: (516) 207-7708

EMAIL: METALSALES@NCBP.COM

Box Gutter Print Approval

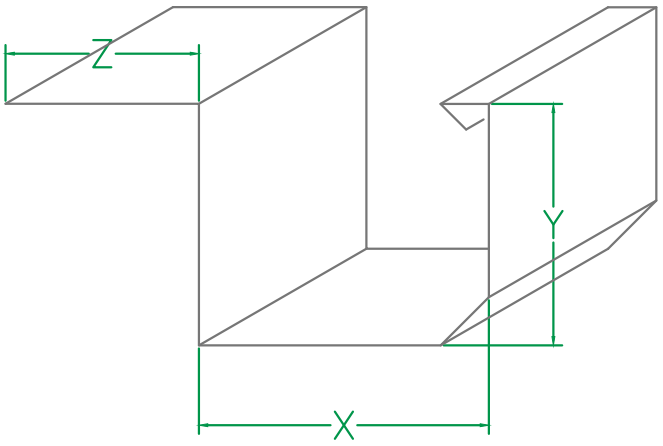

☐ WITH ROOF FLANGE

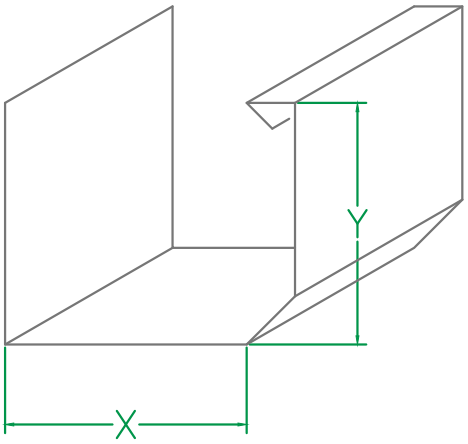

☐ WITHOUT ROOF FLANGE

MATERIAL:

☐ .032" ALUM. ☐ 16 OZ. COPPER

☐ .040" ALUM. ☐ 20 OZ. COPPER

☐ .050" ALUM. ☐ 24 GA STEEL

☐ OTHER: _____

FINISH: _____

COLOR: _____

MEASUREMENTS:

"X": _____

"Y": _____

"Z": _____

QUANTITIES:

LINEAL FEET (10'–0" LENGTHS): _____

END CAP: RIGHT: _____ LEFT: _____

MITERS: _____

PRINT APPROVAL:

ARCHITECTS AND/OR CONTRACTOR SHALL VERIFY ALL DIMENSIONS, SIZES, AND QUANTITIES. FABRICATION WILL NOT BEGIN UNTIL RECEIPT OF SIGNED PRINT APPROVAL

SIGNATURE:

DATE:

PROJECT:

CONTRACTOR:

ARCHITECT:

REPRESENTATIVE:

New Castle Metals
600 West John Street
Hicksville, NY 11801

PHONE: (516) 207-7708

EMAIL: METALSALES@NCBP.COM

Box Leader Print Approval

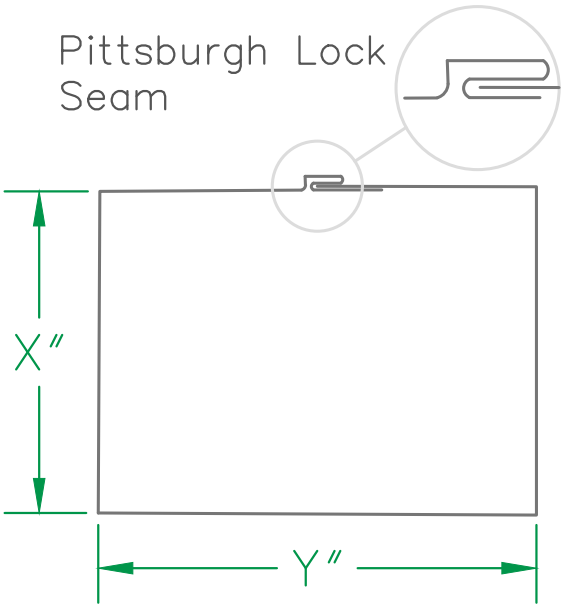

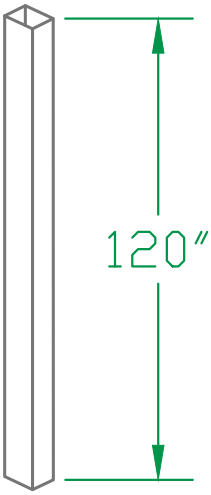

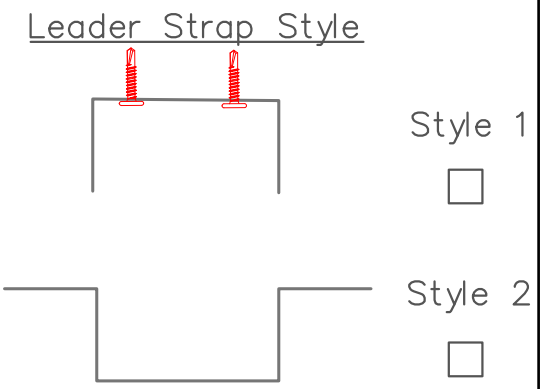

MATERIAL:

- ☐ .032" ALUM.
- ☐ .040" ALUM.
- ☐ .050" ALUM.
- ☐ 16 OZ. COPPER
- ☐ 20 OZ. COPPER
- ☐ 24 GA STEEL
- ☐ OTHER: _____

FINISH: _____

COLOR: _____

PRINT APPROVAL:

ARCHITECTS AND/OR CONTRACTOR SHALL VERIFY ALL DIMENSIONS, SIZES, AND QUANTITIES. FABRICATION WILL NOT BEGIN UNTIL RECEIPT OF SIGNED PRINT APPROVAL

SIGNATURE:

DATE:

PROJECT:

CONTRACTOR:

ARCHITECT:

REPRESENTATIVE:

MEASUREMENTS:

"X": _____

"Y": _____

QUANTITIES:

LINEAL FEET (10'–0" LENGTHS): _____

ELBOW "B" * : _____

ELBOW "A" * : _____

LEADER STRAPS: _____

* STANDARD RIVETED

New Castle Metals
600 West John Street
Hicksville, NY 11801

PHONE: (516) 207-7708
EMAIL: METALSALES@NCBP.COM

Scupper 1 Print Approval

Flange Size: _____

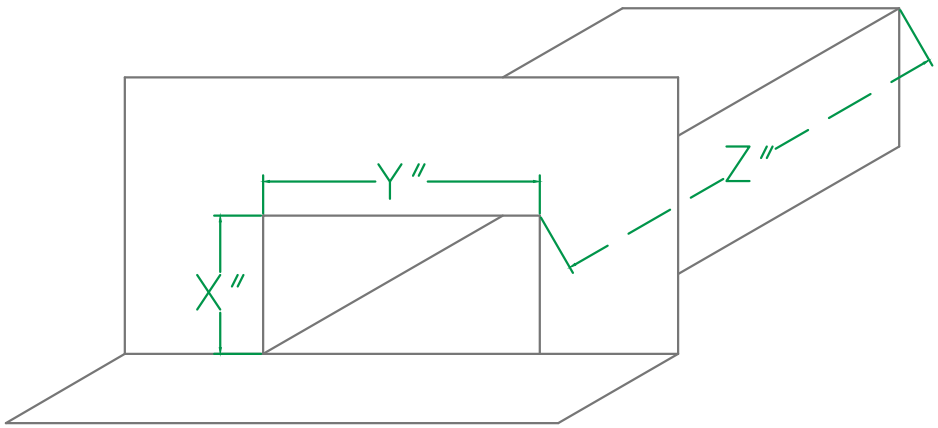

MATERIAL:

- ☐ .032" ALUM.
- ☐ .040" ALUM.
- ☐ .050" ALUM.
- ☐ 16 OZ. COPPER
- ☐ 20 OZ. COPPER
- ☐ 24 GA STEEL
- ☐ OTHER: _____

FINISH: _____

COLOR: _____

MEASUREMENTS:

"X": _____

"Y": _____

"Z": _____

QUANTITIES:

EACH: _____

* STANDARD RIVETED

PRINT APPROVAL:

ARCHITECTS AND/OR CONTRACTOR SHALL VERIFY ALL DIMENSIONS, SIZES, AND QUANTITIES. FABRICATION WILL NOT BEGIN UNTIL RECEIPT OF SIGNED PRINT APPROVAL

SIGNATURE:

DATE:

PROJECT:

CONTRACTOR:

ARCHITECT:

REPRESENTATIVE:

New Castle Metals
600 West John Street
Hicksville, NY 11801

PHONE: (516) 207-7708
EMAIL: METALSALES@NCBP.COM

U-Style Scupper Print Approval

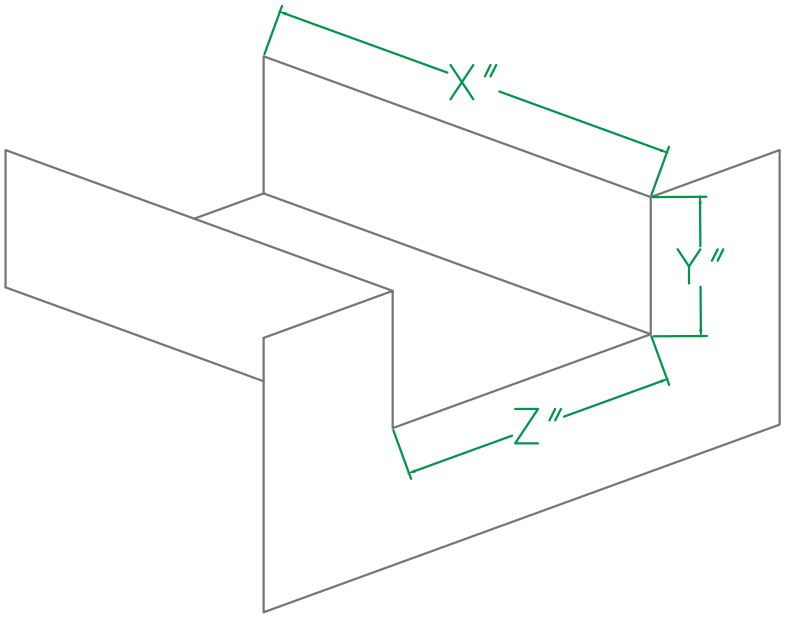

Flange Size: _____

MATERIAL:

- ☐ .032" ALUM.
- ☐ .040" ALUM.
- ☐ .050" ALUM.
- ☐ 16 OZ. COPPER
- ☐ 20 OZ. COPPER
- ☐ 24 GA STEEL
- ☐ OTHER: _____

FINISH: _____

COLOR: _____

MEASUREMENTS:

"X": _____

"Y": _____

"Z": _____

QUANTITIES:

EACH: _____

* STANDARD RIVETED

PRINT APPROVAL:

ARCHITECTS AND/OR CONTRACTOR SHALL VERIFY ALL DIMENSIONS, SIZES, AND QUANTITIES. FABRICATION WILL NOT BEGIN UNTIL RECEIPT OF SIGNED PRINT APPROVAL

SIGNATURE:

DATE:

PROJECT:

CONTRACTOR:

ARCHITECT:

REPRESENTATIVE:

New Castle Metals
600 West John Street
Hicksville, NY 11801

PHONE: (516) 207-7708
EMAIL: METALSALES@NCBP.COM

New Castle Metals Gutter HD System

Overview

The New Castle Metals Gutter HD System is a Heavy Duty Gutter used with single-ply commercial roof systems. Our 7" Box Gutter is available in both pre-painted Kynar500® .040 formed aluminum and 24 gauge galvalume steel. Available in standard lengths of 10' and includes all gutter brackets (spaced 24" on center) and fasteners.

Features and Benefits

- Strongest Gutter System on the market today
- High Performance Gutter Bracket Systems
- ANSI-SPRI ES-1 Certified
- Gutter Bracket is perfect for Salt environments with 0.040 aluminum.
- Gold Standard Paint 35-Year Warranty
- Corporate and Custom Colors are available

Installation

For complete installation instructions, please refer to New Castle Metals Architectural specifications and details.

REVIEW CURRENT NEW CASTLE METALS ARCHITECTURAL SPECIFICATION AND DETAILS FOR SPECIFIC INSTALLATION REQUIREMENTS.

Quality Assurance

New Castle Metals Gutter HD system is tested per ANSI/SPRI Test Method GD-1 / GD-2 and GD-3 Structural Design Standard for Low Slope Roofs. . The Gutter HD system shall be certified by New Castle Metals to design pressures as indicated in current edition of SPRI's Wind Resistance Standard for Edge Systems used with Low Slope Roofing System. This products meets International Building Code minimum requirement.

Technical Services

Engineering and shop drawings, as well as long-form specifications and CAD details, are available from New Castle Metals. Product samples, detail sheets, color chips and color charts are also available for submittal packages. For personal assistance with questions or for full submittal, contact New Castle Metals or your local independent sales representative.

Specifications

Material	Size	Sustained Pressures
24 gauge	7"	-200 / -50 - / - 430 psf (*)
0.040 AL	7"	-230 / -60 - / - 430 psf (*)

* Design Engineer must apply the Factor of Safety
**ADDITIONAL GAUGES - .050 and .063 aluminum and 22 gauge Galvalume are available upon request

600 W John Street // Hicksville, NY 11801 // Phone: 516.207.7708 // www.NCBPMetalRoofing.com // email: metalsales@ncbp.com

Gutter HD

ANSI/SPRI GD-1 CERTIFIED:

.040" Aluminum	24GA Steel
G-1 Horizontal = 210 psf	G-1 Horizontal = 200 psf
G-2 Vertical = 90 psf	G-2 Vertical = 90 psf
G-3 Static = 290 psf	G-3 Static = 280 psf

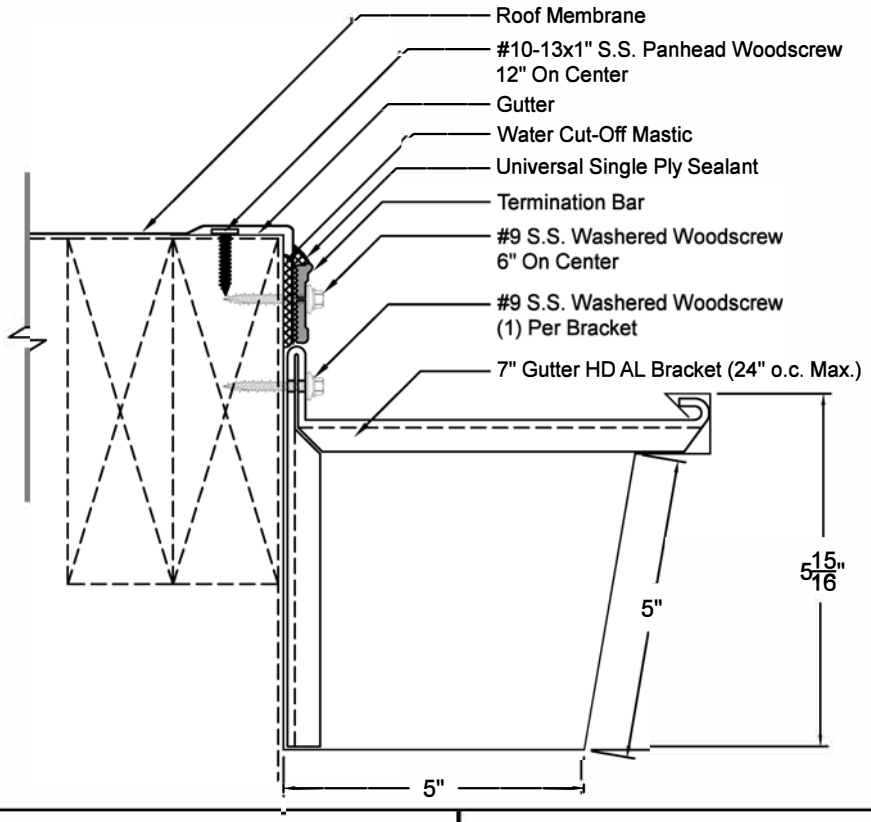

- Gutter Bracket and Fasteners provided.
- Term Bar and fasteners NOT provided.

PRINT APPROVAL:

Architect and/or Contractor shall verify all dimensions, sizes, and quantities, All products to be installed in strict accordance with New Castle's printed instructions.

Approved By: _____

Date: _____

QUANTITIES:

Lineal Feet (10'-0" Lengths): _____

Outside Miters**: _____ ☐ Optional Welded (Surcharge Applies)

Inside Miters**: _____ ☐ Optional Welded (Surcharge Applies)

Right End Caps**: _____ ☐ Optional Welded (Surcharge Applies)

Left End Caps**: _____ ☐ Optional Welded (Surcharge Applies)

** Standard riveted

PROJECT:

ARCHITECT:

ROOFING CONTRACTOR:

REPRESENTATIVE:

MATERIAL:

☐ 24GA ☐ .040" AL

☐ Other: _____

Finish: _____

Color: _____

New Castle Building Products
Metal Division
600 W John St
Hicksville, NY 11801
(516) 207-7708

Effective Date:	9-22-14
Drawn By:	J.S.
Approved By:	B.P.

New Castle Gutter LT System

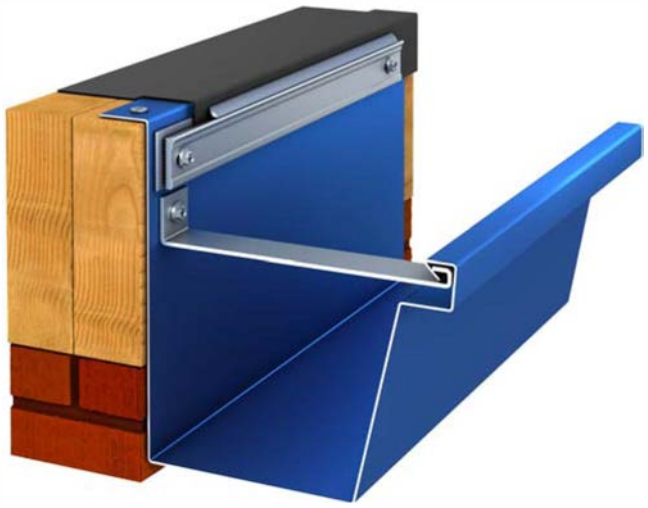

Overview

The New Castle Metals Gutter LT System is a Heavy Duty Gutter used with single-ply commercial roof systems. Our 7" Box Gutter is available in both pre-painted Kynar500® .040; .050; .063 formed aluminum and 24 and 22 gauge galvalume steel. Available in standard lengths of 10' and includes all gutter brackets (spaced 24" on center) and fasteners.

Features and Benefits

- Uses Standard 7" Gutter Bracket System
- ANSI-SPRI ES-1 Certified
- Gold Standard Paint 35-Year Warranty
- Corporate and Custom Colors are available

Installation

For complete installation instructions, please refer to New Castle Metals Architectural specifications and details.

Quality Assurance

New Castle Metals Gutter LT system is tested per ANSI/ SPRI Test Method GD-1 / GD-2 and GD-3 Structural Design Standard for Low Slope Roofs. . The Gutter LT system shall be certified by Drexel Metals to design pressures as indicated in current edition of SPRI's Wind Resistance Standard for Edge Systems used with Low Slope Roofing System. This products meets International Building Code minimum requirement.

Technical Services

Engineering and shop drawings, as well as long-form specifications and CAD details, are available from New Castle Metals. Product samples, detail sheets, color chips and color charts are also available for submittal packages. For personal assistance with questions or for full submittals, contact Drexel Metals or your local independent sales representative.

Specifications

Material	Size	Sustained Pressures
24 gauge	7"	-290 / -20 - / - 430 psf (*)
0.040 AL- 0.063 AL	7"	-310 / -40 - / - 430 psf (*)

* Design Engineer must apply the Factor of Safety
**ADDITIONAL GAUGES - .050 and .063 aluminum and 22 gauge Galvalume are available upon request

600 W John St //Hicksville, NY 11801 //Phone: 516.207.7708 //NCBP.com //email: metalsales@ncbp.com

Gutter LT

ANSI/SPRI GD-1 CERTIFIED:

.040" Aluminum	24GA Steel
G-1 Horizontal = 310 psf	G-1 Horizontal = 290 psf
G-2 Vertical = 40 psf	G-2 Vertical = 20 psf
G-3 Static = 430 psf	G-3 Static = 430 psf

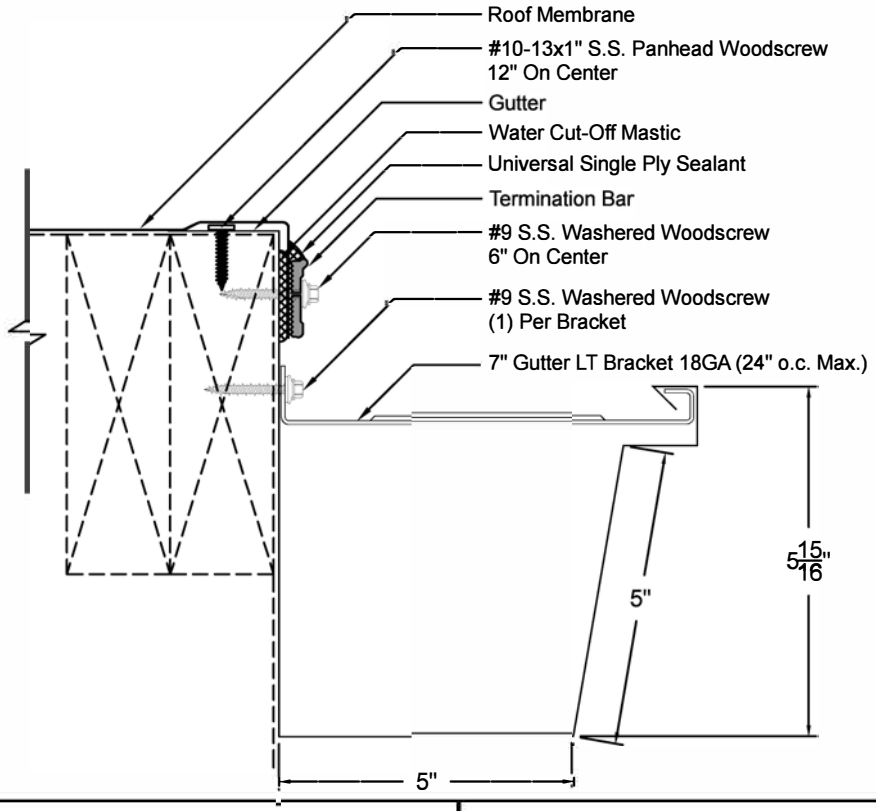

- Gutter Bracket and Fasteners provided.
- Term Bar and fasteners NOT provided.

PRINT APPROVAL:

Architect and/or Contractor shall verify all dimensions, sizes, and quantities, All products to be installed in strict accordance with New Castle's printed instructions.

Approved By: _____

Date: _____

QUANTITIES:

Lineal Feet (10'-0" Lengths*): _____

Outside Miters**: _____ ☐ Optional Welded (Surcharge Applies)

Inside Miters**: _____ ☐ Optional Welded (Surcharge Applies)

Right End Caps**: _____ ☐ Optional Welded (Surcharge Applies)

Left End Caps**: _____ ☐ Optional Welded (Surcharge Applies)

** Standard riveted

PROJECT:

ARCHITECT:

ROOFING CONTRACTOR:

REPRESENTATIVE:

MATERIAL:

☐ 24GA ☐ .040" AL

☐ Other: _____

Finish: _____

Color: _____

New Castle Building Products
Metal Division
600 W John St
Hicksville, NY 11801
(516) 207-7708

Effective Date:	9-22-14
Drawn By:	J.S.
Approved By:	B.P.

New Castle Metals Drip Edge System

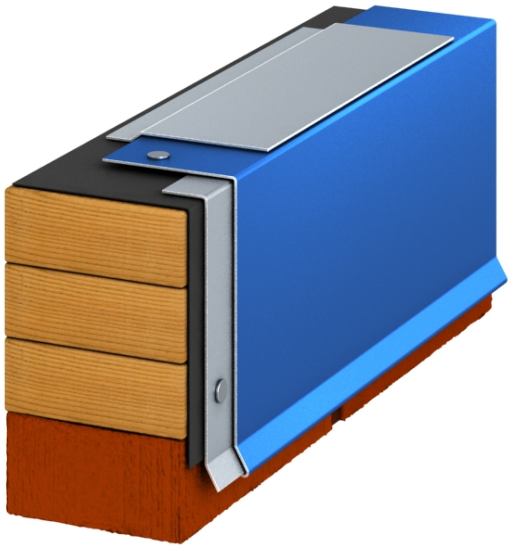

Overview

The New Castle Metals Drip Edge System is a two-part assembly that includes a continuous cleat and a decorative fascia cover for single-ply commercial roof systems. Our Drip Edge is available in pre-painted Kynar500® .032"- .063" formed aluminum and as 24 gauge Galvalume steel. This product features both a 22 gauge and 24 gauge (LT) pre-punched cleats with fasteners spaced at 12" on center. All products come in standard 10' standard cleat and coping cover lengths. Concealed splice plates and fasteners are included with the purchase of this product.

Features and Benefits

- Secures roof Membrane to Parapet Wall
- Allows for the use of high-torque screws without penetrating the top surface of the Membrane
- Pre-Punched Continuos Cleat
- ANSI-SPRI ES-1 Certified
- 220 MPH LIFETIME Wind Warranty
- Gold Standard Paint 35-Year Warranty
- Corporate and Custom Colors are available

Installation

For complete installation instructions, please refer to New Castle Metals Architectural specifications and details.

REVIEW CURRENT NEW CASTLE METALS ARCHITECTURAL SPECIFICATION AND DETAILS FOR SPECIFIC INSTALLATION REQUIREMENTS.

Quality Assurance

New Castle Metals Drip Edge system is tested per ANSI/SPRI Test Method RE-2 for Drip Edge. The Drip Edge system shall be certified by New Castle Metals to design pressures as indicated in current edition of SPRI's Wind Resistance Standard for Edge Systems used with Low Slope Roofing System. This products meets International Building Code minimum requirement.

Technical Services

Engineering and shop drawings, as well as long-form specifications and CAD details, are available from New Castle Metals. Product samples, detail sheets, color chips and color charts are also available for submittal packages. For personal assistance with questions or for full submittals, contact New Castle Metals or your local independent sales representative.

Specifications

Material	Face	Sustained Pressures
24 gauge	up to 6"	22 Ga Cleat /-390 psf (*)
0.040 AL	up to 6"	22 Ga Cleat /-410 psf (*)
24 gauge	up to 6"	24 Ga Cleat /-240 psf (*)
0.040 AL	up to 6"	24 Ga Cleat /-250 psf (*)

* Design Engineer must apply the Factor of Safety
**ADDITIONAL GAUGES - .050 and .063 aluminum and 22 gauge Galvalume are available upon request

600 W John Street // Hicksville, NY 11801 // Phone: 516.207.7708// www.NCBPMetalRoofing.com // email: metalsales@ncbp.com

Drip Edge

ANSI/SPRI ES-1 CERTIFIED: .040" Aluminum = 250 psf, 24GA Steel = 240 psf

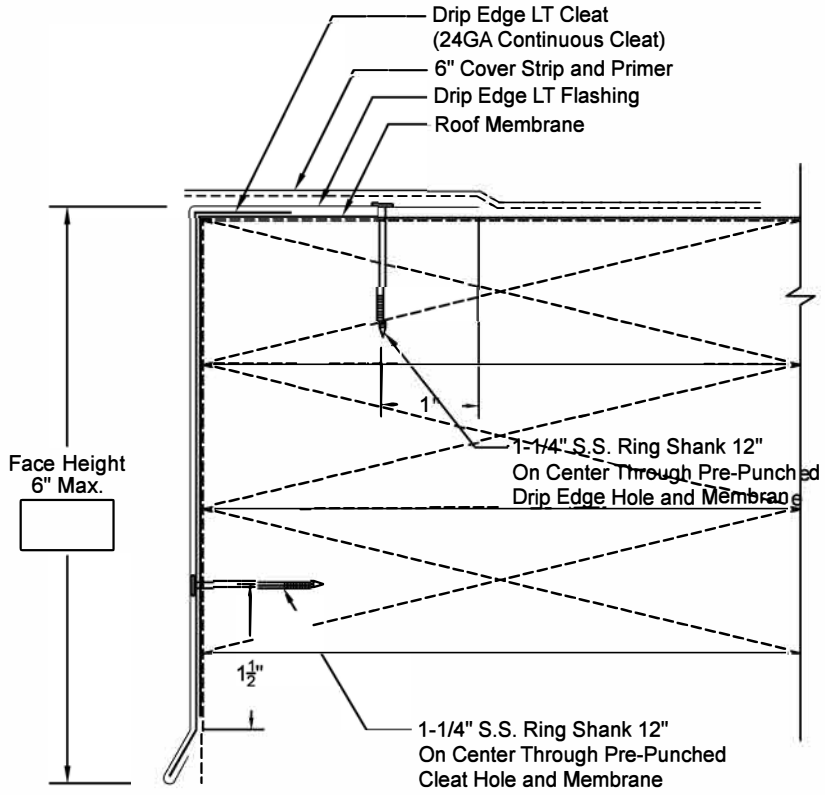

(22GA Cleat testing is available for projects requiring higher pressures.)

- Continuous Cleat and Fasteners provided.
- Concealed Splice Plates provided.
- Splice Plate Sealant available for extra charge.

PRINT APPROVAL:

Architect and/or Contractor shall verify all dimensions, sizes, and quantities, All products to be installed in strict accordance with New Castle's printed instructions.

Approved By:_____

Date:_____

QUANTITIES:

Lineal Feet (10'-0" Lengths): _____

Outside Miters**:_____ ☐ Optional Welded (Surcharge Applies)

Inside Miters**:_____ ☐ Optional Welded (Surcharge Applies)

Right End Caps**:_____ ☐ Optional Welded (Surcharge Applies)

Left End Caps**:_____ ☐ Optional Welded (Surcharge Applies)

Splice Plate Tape Sealant: ☐ Optional Sealant (Surcharge Applies)

** Standard riveted

PROJECT:

ARCHITECT:

ROOFING CONTRACTOR:

REPRESENTATIVE:

MATERIAL:

☐ 24GA ☐ .040" AL

☐ Other:_____

Finish:_____

Color:_____

New Castle Building Products
Metal Division
600 W John St
Hicksville, NY 11801
(516) 207-7708

Effective Date:	9-22-14
Drawn By:	J.S.
Approved By:	B.P.

New Castle Metals Econo Coping System

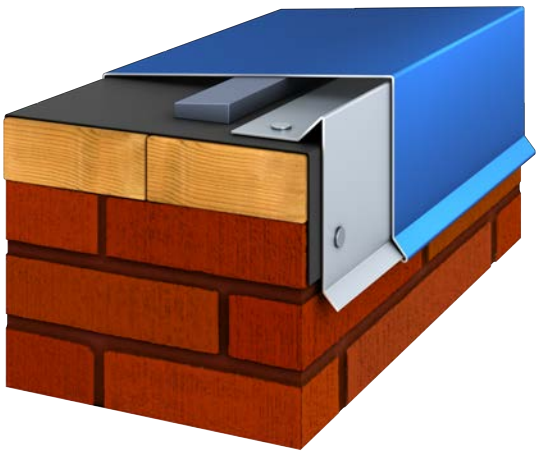

Overview

The New Castle Metals Econo Coping System is a two-part assembly that includes a continuous cleat and a decorative cover for single-ply commercial roof systems. The Econo Coping is available in pre-painted Kynar500® .032" - .063" formed aluminum and 24 gauge Galvalume steel. This product features two cleat options: 22 gauge or 24 (LT) gauge pre-punched cleats with fasteners spaced at 12" on center. All products come in standard 10' standard cleat and coping cover lengths. Concealed splice plates and fasteners are included with the purchase of this product.

Features and Benefits

- Secures roof Membrane to Parapet Wall
- Allows for the use of high-torque screws without penetrating the top surface of the Membrane
- Pre-Punched Continuos Cleat
- ANSI-SPRI ES-1 Certified
- 220-MPH LIFETIME Wind Warranty
- 35-Year Gold Standard Paint Warranty
- Corporate and Custom Colors are available

Installation

For complete installation instructions, please refer to New Castle Metals Architectural specifications and details.

REVIEW CURRENT NEW CASTLE METALS ARCHITECTURAL SPECIFICATION AND DETAILS FOR SPECIFIC INSTALLATION REQUIREMENTS.

Quality Assurance

New Castle Metals Econo Coping system is tested per ANSI/SPRI Test Method RE-3 bi-directional test for wind requirements for Coping and Wall Caps. The Econo Coping shall be certified by New Castle Metals to design pressures as indicated in current edition of SPRI's Wind Resistance Standard for Edge Systems used with Low Slope Roofing System. This products meets International Building Code minimum requirement.

Technical Services

Engineering and shop drawings, as well as long-form specifications and CAD details, are available from New Castle Metals. Product samples, detail sheets, color chips and color charts are also available for submittal packages. For personal assistance with questions or for full submittals, contact New Castle Metals or your local independent sales representative.

Specifications - 22 Gauge CLEAT

Material	Face	Wall Width	Sustained Pressures
24 gauge	up to 6"	<16" max	-250 psf (*)
24 gauge	up to 6"	16" to 24" max	-210 psf (*)
0.040 AL	up to 6"	<16" max	-260 psf (*)
0.040 AL	up to 6"	16" to 24" max	-210 psf (*)

* Design Engineer must apply the Factor of Safety
**ADDITIONAL GAUGES - .050 and .063 aluminum and 22 gauge Galvalume are available upon request

600 W John Street // Hicksville, NY 11801 // Phone: 516.207.7708 // www.NCBPMetalRoofing.com // email: metalsales@ncbp.com

Econo Coping

ANSI/SPRI ES-1 CERTIFIED: 16" - .040" Aluminum = 240 psf, 24GA Steel = 180 psf
24" - .040" Aluminum = 110 psf, 24GA Steel = 130 psf

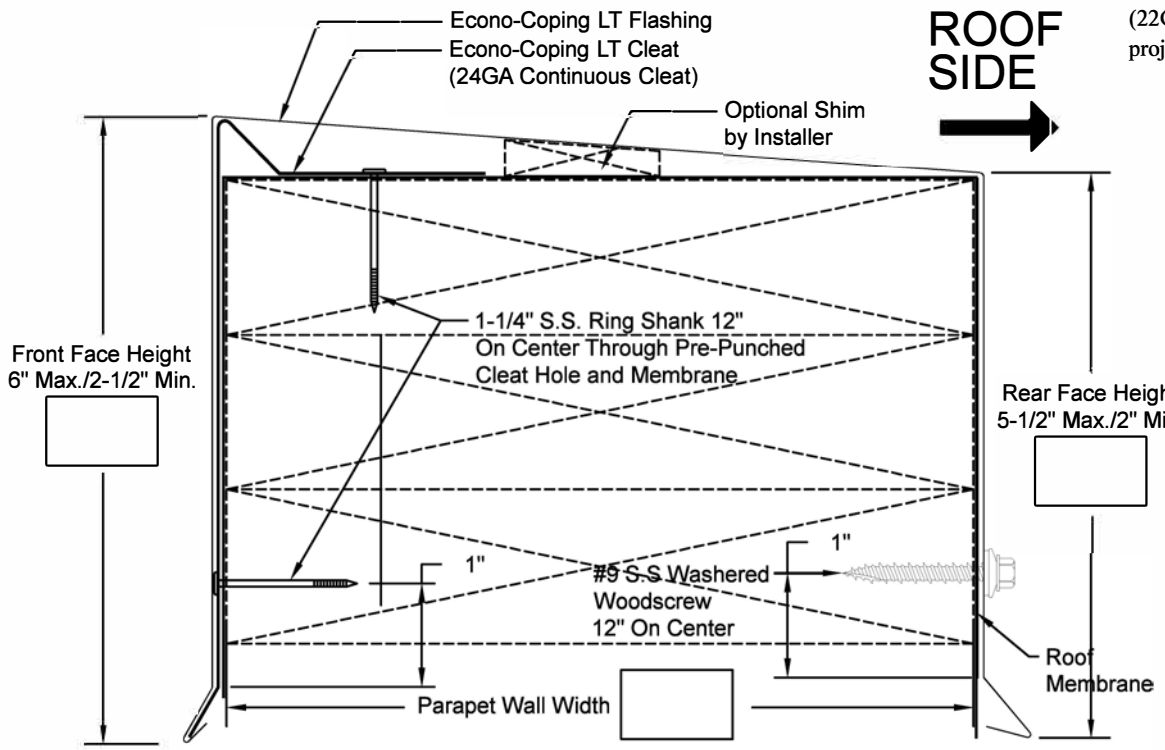

(22GA Cleat testing is available for projects requiring higher pressures.)

- Continuous Cleat and Fasteners provided.
- Concealed Splice Plates provided.
- Splice Plate Sealant available for extra charge.

PRINT APPROVAL:

Architect and/or Contractor shall verify all dimensions, sizes, and quantities, All products to be installed in strict accordance with New Castle's printed instructions.

Approved By: _____

Date: _____

QUANTITIES:

Lineal Feet (10'-0" Lengths): _____

Outside Miters**: _____ ☐ Optional Welded (Surcharge Applies)

Inside Miters**: _____ ☐ Optional Welded (Surcharge Applies)

Right End Caps**: _____ ☐ Optional Welded (Surcharge Applies)

Left End Caps**: _____ ☐ Optional Welded (Surcharge Applies)

Splice Plate Tape Sealant: ☐ Optional Sealant (Surcharge Applies)

** Standard riveted

PROJECT:

ARCHITECT:

ROOFING CONTRACTOR:

REPRESENTATIVE:

MATERIAL:

☐ 24GA ☐ .040" AL

☐ Other: _____

Finish: _____

Color: _____

New Castle Building Products
Metal Division
600 W John St
Hicksville, NY 11801
(516) 207-7708

Effective Date:	9-22-14
Drawn By:	J.S.
Approved By:	B.P.

New Castle Metals Fascia HD System

Overview

The New Castle Metals Fascia HD System is a two-part assembly that includes a continuous cleat and a decorative fascia cover for single-ply commercial roof systems. Our Fascia HD is available in pre-painted Kynar500® .040" formed aluminum as 24 gauge Galvalume steel. This product features a 18 gauge pre-punched cleat with fasteners spaced at 12" on center. All products come in standard 10' standard cleat and coping cover lengths. Concealed splice plates and fasteners are included with the purchase of this product.

Features and Benefits

- Secures roof Membrane to Parapet Wall
- Allows for the use of high-torque screws without penetrating the top surface of the Membrane
- Pre-Punched Continuos Cleat
- ANSI-SPRI ES-1 Certified
- 210 MPH LIFETIME Wind Warranty
- Gold Standard Warranty
- Corporate and Custom Colors are available

Installation

For complete installation instructions, please refer to New Castle Metals Architectural specifications and details.

REVIEW CURRENT NEW CASTLE METALS ARCHITECTURAL SPECIFICATION AND DETAILS FOR SPECIFIC INSTALLATION REQUIREMENTS.

Quality Assurance

New Castle Metals Fascia HD system is tested per ANSI/SPRI Test Method RE-2 for fascia. The Fascia HD systems shall be certified by New Castle Metals to design pressures as indicated in current edition of SPRI's Wind Resistance Standard for Edge Systems used with Low Slope Roofing System. This products meets International Building Code minimum requirement.

Technical Services

Engineering and shop drawings, as well as long-form specifications and CAD details, are available from New Castle Metals. Product samples, detail sheets, color chips and color charts are also available for submittal packages. For personal assistance with questions or for full submittals, contact New Castle Metals or your local independent sales representative.

Specifications

Material	Face	Sustained Pressures
24 gauge	up to 10"	-260 psf (*)
0.040 AL	up to 10"	-340 psf (*)

* Design Engineer must apply the Factor of Safety
**ADDITIONAL GAUGES - .050 and .063 aluminum and 22 gauge Galvalume are available upon request

600 W John Street// Hicksville, NY 11801 // Phone: 516.207.7708 // www.NCBPMetalRoofing.com // email: metalsales@ncbp.com

Fascia Cover HD

ANSI/SPRI ES-1 CERTIFIED: .040" Aluminum =340 psf, 24GA Steel = 260 psf

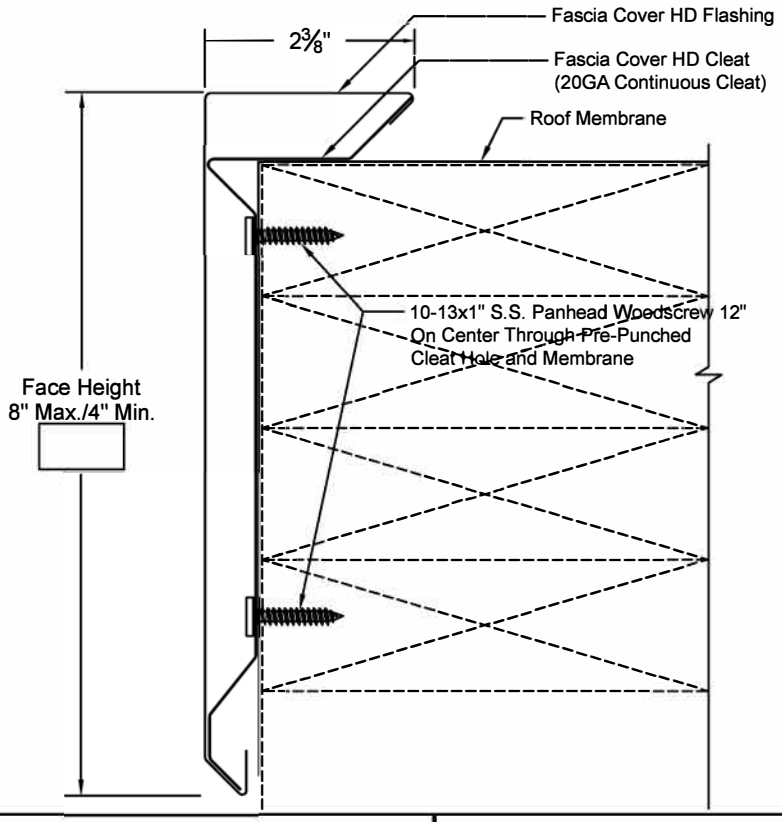

- Continuous Cleat and Fasteners provided.
- Concealed Splice Plates provided.
- Splice Plate Sealant available for extra charge.

PRINT APPROVAL:

Architect and/or Contractor shall verify all dimensions, sizes, and quantities, All products to be installed in strict accordance with New Castle's printed instructions.

Approved By:_____

Date:_____

QUANTITIES:

Lineal Feet (10'-0" Lengths): _____

Outside Miters**:_____ ☐ Optional Welded (Surcharge Applies)

Inside Miters**:_____ ☐ Optional Welded (Surcharge Applies)

Right End Caps**:_____ ☐ Optional Welded (Surcharge Applies)

Left End Caps**:_____ ☐ Optional Welded (Surcharge Applies)

Splice Plate Tape Sealant: ☐ Optional Sealant (Surcharge Applies)

** Standard riveted

PROJECT:

ARCHITECT:

ROOFING CONTRACTOR:

REPRESENTATIVE:

MATERIAL:

☐ 24GA ☐ .040" AL

☐ Other:_____

Finish:_____

Color:_____

New Castle Building Products
Metal Division
600 W John St
Hicksville, NY 11801
(516) 207-7708

Effective Date:	9-22-14
Drawn By:	J.S.
Approved By:	B.P.

New Castle Metals Fascia LT System

Overview

The New Castle Metal Fascia LT System is a two-part assembly that includes a continuous cleat and a decorative fascia cover for single-ply commercial roof systems. Our Fascia LT is available in pre-painted Kynar500® .040"; .050"; .063" formed aluminum as 24 and 22 gauge Galvalume steel. This product features a 22 gauge pre-punched cleats with fasteners spaced at 12" on center. All products come in standard 10' standard cleat and coping cover lengths. Concealed splice plates and fasteners are included with the purchase of this product.

Features and Benefits

- Secures roof Membrane to Parapet Wall
- Allows for the use of high-torque screws without penetrating the top surface of the Membrane
- Pre-Punched Continuos Cleat
- ANSI-SPRI ES-1 Certified
- 110 MPH 20 Year Wind Warranty
- Corporate and Custom Colors are available
- Gold Standard Paint Warranty

Installation

For complete installation instructions, please refer to New Castle Metals Architectural specifications and details.

Quality Assurance

New Castle Metals Fascia LT system is tested per ANSI/ SPRI Test Method RE-2 for fascia. The Fascia LT systems shall be certified by New Castle Metals to design pressures as indicated in current edition of SPRI's Wind Resistance Standard for Edge Systems used with Low Slope Roofing System. This products meets International Building Code minimum requirement.

Technical Services

Engineering and shop drawings, as well as long-form specifications and CAD details, are available from Drexel Metals. Product samples, detail sheets, color chips and color charts are also available for submittal packages. For personal assistance with questions or for full submittals, contact New Castle Metals or your local independent sales representative.

Specifications

Material	Face	Sustained Pressures
24 gauge	up to 8"	-210 psf (*)
0.040 AL- 0.063 AL	up to 6"	-180 psf (*)

* Design Engineer must apply the Factor of Safety
**ADDITIONAL GAUGES - .050 and .063 aluminum and 22 gauge Galvalume are available upon request

600 W John St // Hicksville, NY 11801 // Phone: 516.207.7708 // NCBP.com // email: metalsales@ncbp.com

Fascia Cover LT

ANSI/SPRI ES-1 CERTIFIED: .040" Aluminum = 180 psf, 24GA Steel = 210 psf

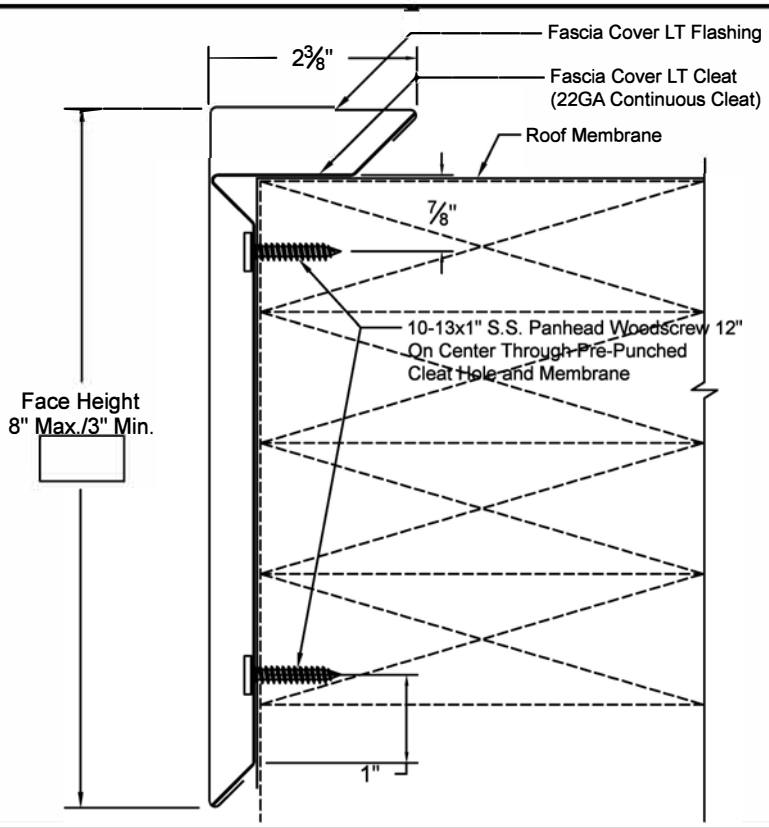

FACE HEIGHT	NAILER QTY.
8" max.	4
6"	3
4-1/2"	2
3" min.	1

- Continuous Cleat and Fasteners provided.
- Concealed Splice Plates provided.
- Splice Plate Sealant available for extra charge.

PRINT APPROVAL:

Architect and/or Contractor shall verify all dimensions, sizes, and quantities, All products to be installed in strict accordance with New Castle's printed instructions.

Approved By:_____

Date:_____

QUANTITIES:

Lineal Feet (10'-0" Lengths): _____

Outside Miters**:_____ ☐ Optional Welded (Surcharge Applies)

Inside Miters**:_____ ☐ Optional Welded (Surcharge Applies)

Right End Caps**:_____ ☐ Optional Welded (Surcharge Applies)

Left End Caps**:_____ ☐ Optional Welded (Surcharge Applies)

Splice Plate Tape Sealant: ☐ Optional Sealant (Surcharge Applies)

** Standard riveted

PROJECT:

ARCHITECT:

ROOFING CONTRACTOR:

REPRESENTATIVE:

MATERIAL:

☐ 24GA ☐ .040" AL

☐ Other:_____

Finish:_____

Color:_____

New Castle Building Products
Metal Division
600 W John St
Hicksville, NY 11801
(516) 207-7708

Effective Date:	9-22-14
Drawn By:	J.S.
Approved By:	B.P.

New Castle Metals Fascia Extender

Overview

The New Castle Metals Fascia Extender is a two-part assembly that includes a continuous cleat and a decorative fascia cover for single-ply commercial roof systems. Our Extender is available in pre-painted Kynar500® .032" formed aluminum as well as 24 gauge Galvalume steel. This product features a 24 gauge cleat with fasteners spaced at 12" on center. All products come in standard 10' standard lengths. Concealed splice plates and fasteners are included with the purchase of this product.

Features and Benefits

- Extends the face of the fascia for longer stretch that helps meet design without sacrificing tested sizes.
- Gold Standard Warranty (35YR Non-Prorated)
- Corporate and Custom Colors are available

Installation

For complete installation instructions, please refer to New Castle Metals Architectural specifications and details.

REVIEW CURRENT NEW CASTLE METALS ARCHITECTURAL SPECIFICATION AND DETAILS FOR SPECIFIC INSTALLATION REQUIREMENTS.

Engineering and shop drawings, as well as long-form specifications and CAD details, are available from New Castle Metals. Product samples, detail sheets, color chips and color charts are also available for submittal packages. For personal assistance with questions or for full submittals, contact New Castle Metals or your local independent sales representative.

ADDITIONAL GAUGES - .040, .050 and .063 aluminum and 22 gauge Galvalume are available upon request

600 W John St // Hicksville, NY 11801 // Phone: 516.207.7708// NCBPMetalRoofing.com // metalsales@ncbp.com

Fascia Extender

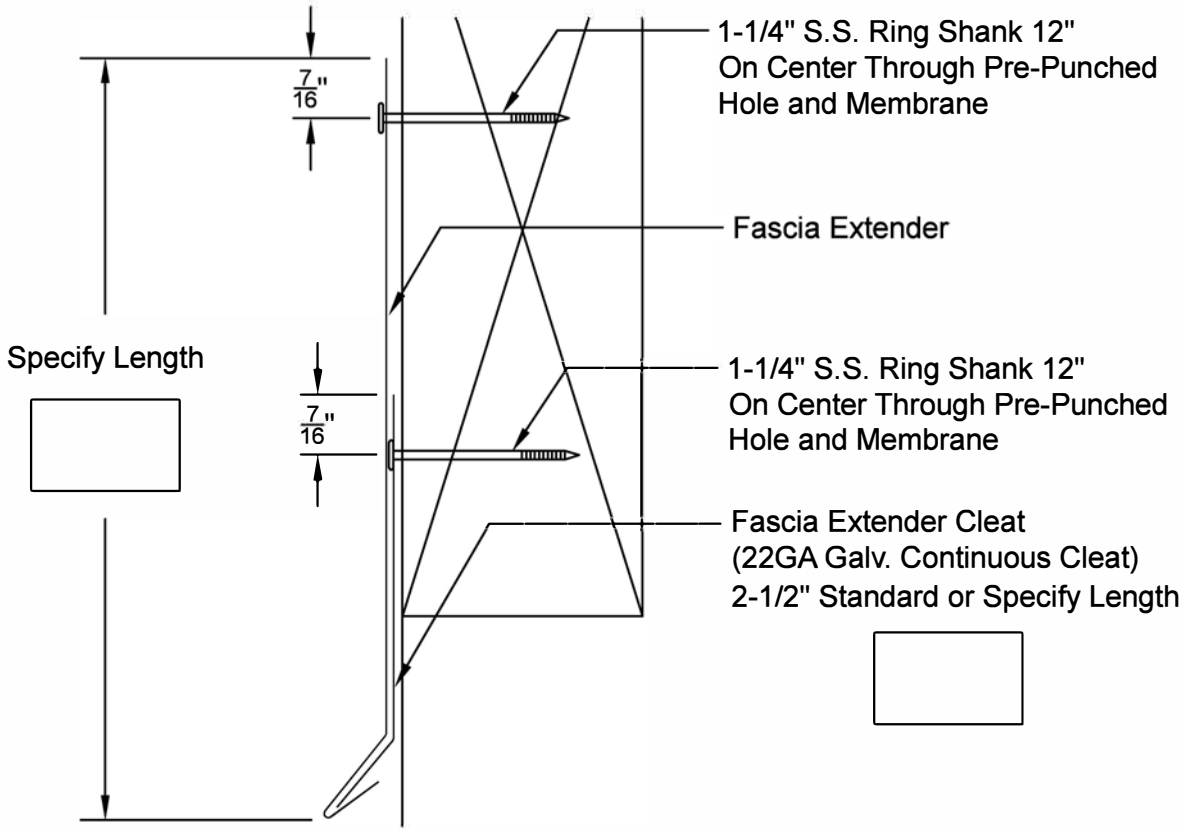

- Continuous Cleat and fasteners provided.
- Concealed Splice Plates provided.
- Splice Plate Sealant available for extra charge.

PRINT APPROVAL:

Architect and/or Contractor shall verify all dimensions, sizes, and quantities, All products to be installed in strict accordance with New Castle's printed instructions.

Approved By:_____

Date:_____

QUANTITIES:

Lineal Feet (10'-0" Lengths): _____

Outside Miters**:_____ ☐ Optional Welded (Surcharge Applies)

Inside Miters**:_____ ☐ Optional Welded (Surcharge Applies)

Right End Caps**:_____ ☐ Optional Welded (Surcharge Applies)

Left End Caps**:_____ ☐ Optional Welded (Surcharge Applies)

Splice Plate Tape Sealant: ☐ Optional Sealant (Surcharge Applies)

** Standard riveted

PROJECT:

ARCHITECT:

ROOFING CONTRACTOR:

REPRESENTATIVE:

MATERIAL:

☐ 24GA ☐ .040" AL

☐ Other:_____

Finish:_____

Color:_____

Effective Date:	5-1-13
Drawn By:	J.S.
Approved By:	B.P.

New Castle Building Products
Metal Division
600 W John St
Hicksville, NY 11801
(516) 207-7708

New Castle Metals Econo Gravel Stop System

Overview

The New Castle Metals Econo Gravel Stop System is a two-part assembly that includes a continuous cleat and a decorative fascia cover for single-ply commercial roof systems. Our Econo Gravel Stop is available in pre-painted Kynar500® .032" formed aluminum as well as 24 gauge Galvalume steel. This product features a 24 gauge pre-punched cleats with fasteners spaced at 12" on center. All products come in standard 10' standard cleat and fascia cover lengths. Concealed splice plates and fasteners are included with the purchase of this product.

Features and Benefits

- Secures roof Membrane to Parapet Wall
- Allows for the use of high-torque screws without penetrating the top surface of the Membrane
- Pre-Punched Continuos Cleat
- Economical Design
- ANSI-SPRI ES-1 Certified
- 110 MPH 20-Year Wind Warranty
- Gold Standard Paint 35-Year Warranty
  Corporate and Custom Colors are available

Installation

For complete installation instructions, please refer to New Castle Metals Architectural specifications and details.

REVIEW CURRENT NEW CASTLE METALS ARCHITECTURAL SPECIFICATION AND DETAILS FOR SPECIFIC INSTALLATION REQUIREMENTS.

Quality Assurance

New Castle Metals Econo Gravel Stop system is tested per ANSI/SPRI Test Method RE-2 for fascia. The Econo Gravel Stop system shall be certified by New Castle Metals to design pressures as indicated in current edition of SPRI's Wind Resistance Standard for Edge Systems used with Low Slope Roofing System. This products meets International Building Code minimum requirement.

Technical Services

Engineering and shop drawings, as well as long-form specifications and CAD details, are available from New Castle Metals. Product samples, detail sheets, color chips and color charts are also available for submittal packages. For personal assistance with questions or for full submittals, contact New Castle Metals or your local independent sales representative.

Specifications

Material	Face	Sustained Pressures
24 gauge	up to 10"	-310 psf (*)
0.032 AL	up to 10"	-260 psf (*)

* Design Engineer must apply the Factor of Safety
**ADDITIONAL GAUGES - .040, .050 and .063 aluminum and 22 gauge Galvalume are available upon request

600 W John St // Hicksville, NY 11801 // Phone: 516.207.7708 // NCBPMetalRoofing.com // email: metalsales@ncbp.com

Econo Gravel Stop

ANSI/SPRI ES-1 CERTIFIED: .032" Aluminum = 260 psf, 24GA Steel = 310 psf

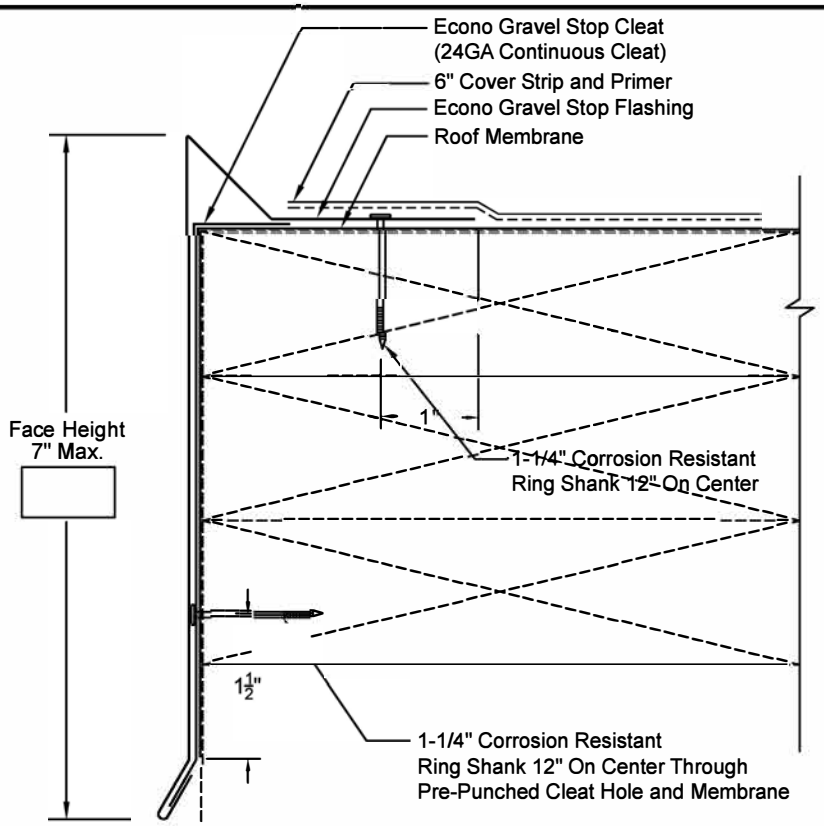

- Continuous Cleat and Fasteners provided.
- Concealed Splice Plates provided.
- Splice Plate Sealant available for extra charge.

PRINT APPROVAL:

Architect and/or Contractor shall verify all dimensions, sizes, and quantities, All products to be installed in strict accordance with New Castle's printed instructions.

Approved By: _____

Date: _____

QUANTITIES:

Lineal Feet (10'-0" Lengths): _____

Outside Miters**: _____ ☐ Optional Welded (Surcharge Applies)

Inside Miters**: _____ ☐ Optional Welded (Surcharge Applies)

Right End Caps**: _____ ☐ Optional Welded (Surcharge Applies)

Left End Caps**: _____ ☐ Optional Welded (Surcharge Applies)

Splice Plate Tape Sealant: ☐ Optional Sealant (Surcharge Applies)

** Standard riveted

PROJECT:

ARCHITECT:

ROOFING CONTRACTOR:

REPRESENTATIVE:

MATERIAL:

☐ 24GA ☐ .032" AL

☐ Other: _____

Finish: _____

Color: _____

New Castle Building Products
Metal Division
600 W John St
Hicksville, NY 11801
(516) 207-7708

Effective Date:	9-1-15
Drawn By:	J.S.
Approved By:	B.P.

New Castle Metals Gravel Stop System

Overview

The New Castle Metals Snap Gravel Stop System is a two-part assembly that includes a continuous cleat and a decorative fascia cover for single-ply commercial roof systems. Our Snap Gravel Stop is available in pre-painted Kynar500® .032" to .063" formed aluminum as 24 gauge Galvalume steel. This product features a 22 gauge pre-punched cleats with fasteners spaced at 12" on center. All products come in standard 10' standard cleat and coping cover lengths. Concealed splice plates and fasteners are included with the purchase of this product.

Features and Benefits

- Secures roof Membrane to Parapet Wall
- Allows for the use of high-torque screws without penetrating the top surface of the Membrane
- Pre-Punched Continuos Cleat
- ANSI-SPRI ES-1 Certified
- 110 MPH 20-Year Wind Warranty
- Gold Standard Paint 35-Year Warranty
- Corporate and Custom Colors are available

Installation

For complete installation instructions, please refer to New Castle Metals Architectural specifications and details.

REVIEW CURRENT NEW CASTLE METALS ARCHITECTURAL SPECIFICATION AND DETAILS FOR SPECIFIC INSTALLATION REQUIREMENTS.

Quality Assurance

New Castle Metals Snap Gravel Stop system is tested per ANSI/SPRI Test Method RE-2 for fascia. The Snap Gravel Stop system shall be certified by New Castle Metals to design pressures as indicated in current edition of SPRI's Wind Resistance Standard for Edge Systems used with Low Slope Roofing System. This products meets International Building Code minimum requirement.

Technical Services

Engineering and shop drawings, as well as long-form specifications and CAD details, are available from New Castle Metals. Product samples, detail sheets, color chips and color charts are also available for submittal packages. For personal assistance with questions or for full submittal, contact New Castle Metals or your local independent sales representative.

Specifications

Material	Face	Sustained Pressures
24 gauge	up to 10"	-180 psf (*)
0.040 AL	up to 10"	-170 psf (*)

* Design Engineer must apply the Factor of Safety
**ADDITIONAL GAUGES - .050 and .063 aluminum and 22 gauge Galvalume are available upon request

600 W John Street // Hicksville, NY 11801 // Phone: 516.207.7708 // www.NCBPMetalRoofing.com // email: metalsales@ncbp.com

Gravel Stop

ANSI/SPRI ES-1 CERTIFIED: .040" Aluminum = 170 psf, 24GA Steel = 180 psf

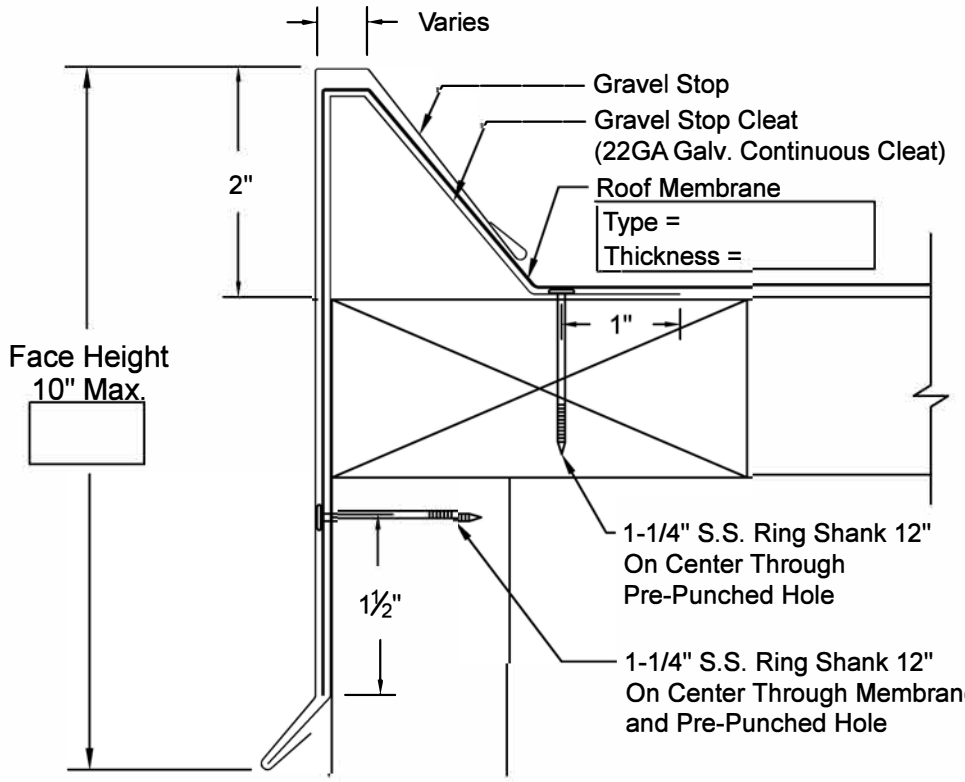

- Continuous Cleat and fasteners provided.
- Concealed Splice Plates provided.
- Splice Plate Sealant available for extra charge.

PRINT APPROVAL:

Architect and/or Contractor shall verify all dimensions, sizes, and quantities, All products to be installed in strict accordance with New Castle's printed instructions.

Approved By: _____

Date: _____

QUANTITIES:

Lineal Feet (10'-0" Lengths) : _____

Outside Miters**: _____ ☐ Optional Welded (Surcharge Applies)

Inside Miters**: _____ ☐ Optional Welded (Surcharge Applies)

Right End Caps**: _____ ☐ Optional Welded (Surcharge Applies)

Left End Caps**: _____ ☐ Optional Welded (Surcharge Applies)

Splice Plate Tape Sealant: ☐ Optional Sealant (Surcharge Applies)

** Standard riveted

PROJECT:

ARCHITECT:

ROOFING CONTRACTOR:

REPRESENTATIVE:

MATERIAL:

☐ 24GA ☐ .040" AL

☐ Other: _____

Finish: _____

Color: _____

New Castle Building Products
Metal Division
201 W John St
Hicksville, NY 11801
(516) 207-7708

Effective Date:	5-1-13
Drawn By:	J.S.
Approved By:	B.P.

New Castle Metals Snap Gravel Stop LT System

Overview

The New Castle Metals Snap Gravel Stop LT System is a two-part assembly that includes a continuous cleat and a decorative fascia cover for single-ply commercial roof systems. Our Snap Gravel Stop LT is available in pre-painted Kynar500® .040" formed aluminum as 24 gauge Galvalume steel. This product features a 24 gauge pre-punched cleats with fasteners spaced at 12" on center. All products come in standard 10' standard cleat and coping cover lengths. Concealed splice plates and fasteners are included with the purchase of this product.

Features and Benefits

- Secures roof Membrane to Parapet Wall
- Allows for the use of high-torque screws without penetrating the top surface of the Membrane
- Pre-Punched Continuos Cleat
- ANSI-SPRI ES-1 Certified
- 110 MPH 20-Year Wind Warranty
- Gold Standard Paint 35-Year Warranty
- Corporate and Custom Colors are available

Installation

For complete installation instructions, please refer to New Castle Metals Architectural specifications and details.

REVIEW CURRENT NEW CASTLE METALS ARCHITECTURAL SPECIFICATION AND DETAILS FOR SPECIFIC INSTALLATION REQUIREMENTS.

Quality Assurance

New Castle Metals Snap Gravel Stop LT system is tested per ANSI/SPRI Test Method RE-2 for fascia. The Snap Gravel Stop LT system shall be certified by New Castle Metals to design pressures as indicated in current edition of SPRI's Wind Resistance Standard for Edge Systems used with Low Slope Roofing System. This products meets International Building Code minimum requirement.

Technical Services

Engineering and shop drawings, as well as long-form specifications and CAD details, are available from New Castle Metals. Product samples, detail sheets, color chips and color charts are also available for submittal packages. For personal assistance with questions or for full submittals, contact New Castle Metals or your local independent sales representative.

Specifications

Material	Face	Sustained Pressures
24 gauge	up to 8"	-70 psf (*)
0.040 AL	up to 8"	-90 psf (*)

* Design Engineer must apply the Factor of Safety
**ADDITIONAL GAUGES - .050 and .063 aluminum and 22 gauge Galvalume are available upon request

600 W John St // Hicksville, NY 11801 // Phone: 516.207.7708 // www.NCBPMetalRoofing.com // email: metalsales@ncbp.com

Snap Gravel Stop LT

ANSI/SPRI ES-1 CERTIFIED: .040" Aluminum =90 psf, 24GA Steel = 70 psf

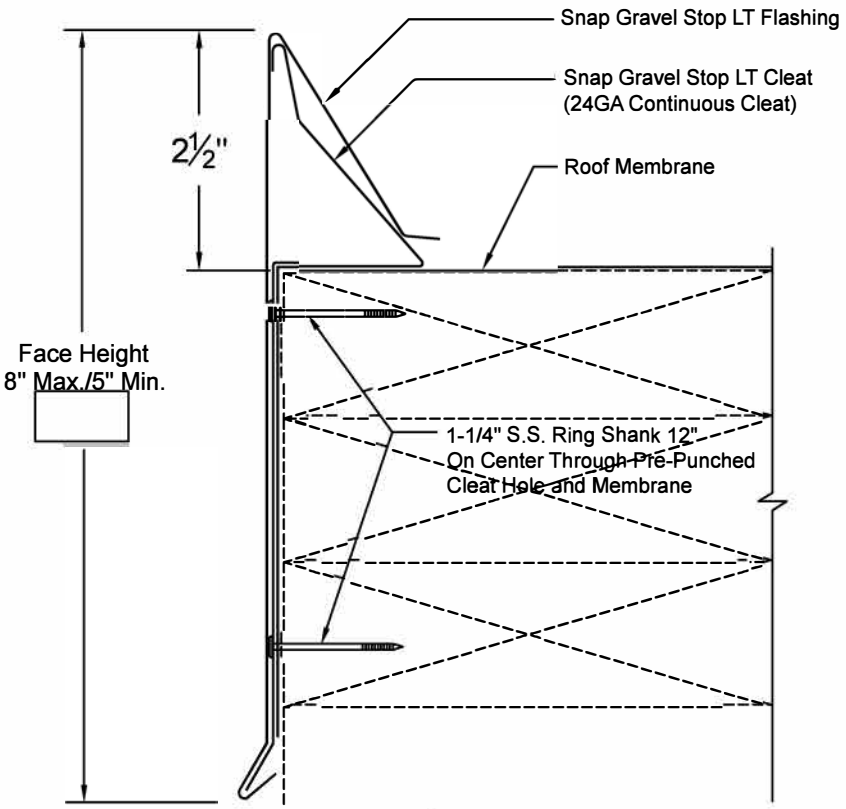

- Continuous Cleat and Fasteners provided.
- Concealed Splice Plates provided.
- Splice Plate Sealant available for extra charge.

PRINT APPROVAL:

Architect and/or Contractor shall verify all dimensions, sizes, and quantities, All products to be installed in strict accordance with New Castle's printed instructions.

Approved By:_____

Date:_____

QUANTITIES:

Lineal Feet (10'-0" Lengths):_____

Outside Miters**:_____ ☐ Optional Welded (Surcharge Applies)

Inside Miters**:_____ ☐ Optional Welded (Surcharge Applies)

Right End Caps**:_____ ☐ Optional Welded (Surcharge Applies)

Left End Caps**:_____ ☐ Optional Welded (Surcharge Applies)

Splice Plate Tape Sealant: ☐ Optional Sealant (Surcharge Applies)

** Standard riveted

PROJECT:

ARCHITECT:

ROOFING CONTRACTOR:

REPRESENTATIVE:

MATERIAL:

☐ 24GA ☐ .040" AL

☐ Other:_____

Finish:_____

Color:_____

New Castle Building Products
Metal Division
600 W John St
Hicksville, NY 11801
(516) 207-7708

Effective Date:	9-22-14
Drawn By:	J.S.
Approved By:	B.P.

New Castle Metals Spring-Tite Coping w/ Continuous Cleat System

Overview

New Castle Metals Spring-Tite Coping w/ continuous cleat system is a two-part assembly that includes a 10' continuous cleat and a decorative snap-on coping cover for single ply commercial roof systems. Our Sping-Tite Coping w/ continuous cleat is available as pre-painted Kynar500® in .040" formed aluminum and 24 gauge galvalume steel. This product features a 22-gauge (G90) continuous pre-punched cleat, is available in 10' standard cleat lengths and standard coping cover lengths. Concealed splices plates and fasteners are included with the purchase of this product.

Features and Benefits

- Secures roof Membrane to Parapet Wall
- Allows for the use of high-torque screws without penetrating the top surface of the Membrane
- Pre-Punched Continuous Cleat
- ANSI-SPRI ES-1 Certified
- 110 MPH 20-Year Wind Warranty
- 35-Year Gold Standard Paint Warranty
- Corporate and Custom Colors are available

Installation

For complete installation instructions, please refer to New Castle Metals Architectural specifications and details.

REVIEW CURRENT NEW CASTLE METALS ARCHITECTURAL SPECIFICATION AND DETAILS FOR SPECIFIC INSTALLATION REQUIREMENTS.

Quality Assurance

New Castle Metals Spring-Tite Coping w/ Continuous Cleat system is tested per ANSI/SPRI Test Method RE-3 bi-directional test for wind requirements for Coping and Wall Caps. The Spring-Tite Coping shall be certified by New Castle Metals to design pressures as indicated in current edition of SPRI's Wind Resistance Standard for Edge Systems used with Low Slope Roofing System. This products meets International Building Code minimum requirement.

Technical Services

Engineering and shop drawings, as well as long-form specifications and CAD details, are available from New Castle Metals. Product samples, detail sheets, color chips and color charts are also available for submittal packages. For personal assistance with questions or for full submittals, contact New Castle Metals or your local independent sales representative.

Specifications

Material	Face	Wall Width	Sustained Pressures
24 gauge	up to 6"	<16" max	-105 psf (*)
24 gauge	up to 6"	16" to 20" max	- 90 psf (*)
0.040 AL	up to 6"	<16" max	-90 psf (*)
0.040 AL	up to 6"	16" to 20" max	-75 psf (*)

* Design Engineer must apply the Factor of Safety
**ADDITIONAL GAUGES - .050 and .063 aluminum and 22 gauge Galvalume are available upon request

600 W John Street // Hicksville, NY 11801 // Phone: 516.207.7708// www.NCBPMetalRoofing.com // email: metalsales@ncbp.com

Spring-Tite Coping

ANSI/SPRI ES-1 CERTIFIED: 16" - .040" Aluminum = 90 psf, 24GA Steel = 105 psf
20" - .040" Aluminum = 75 psf, 24GA Steel = 90 psf

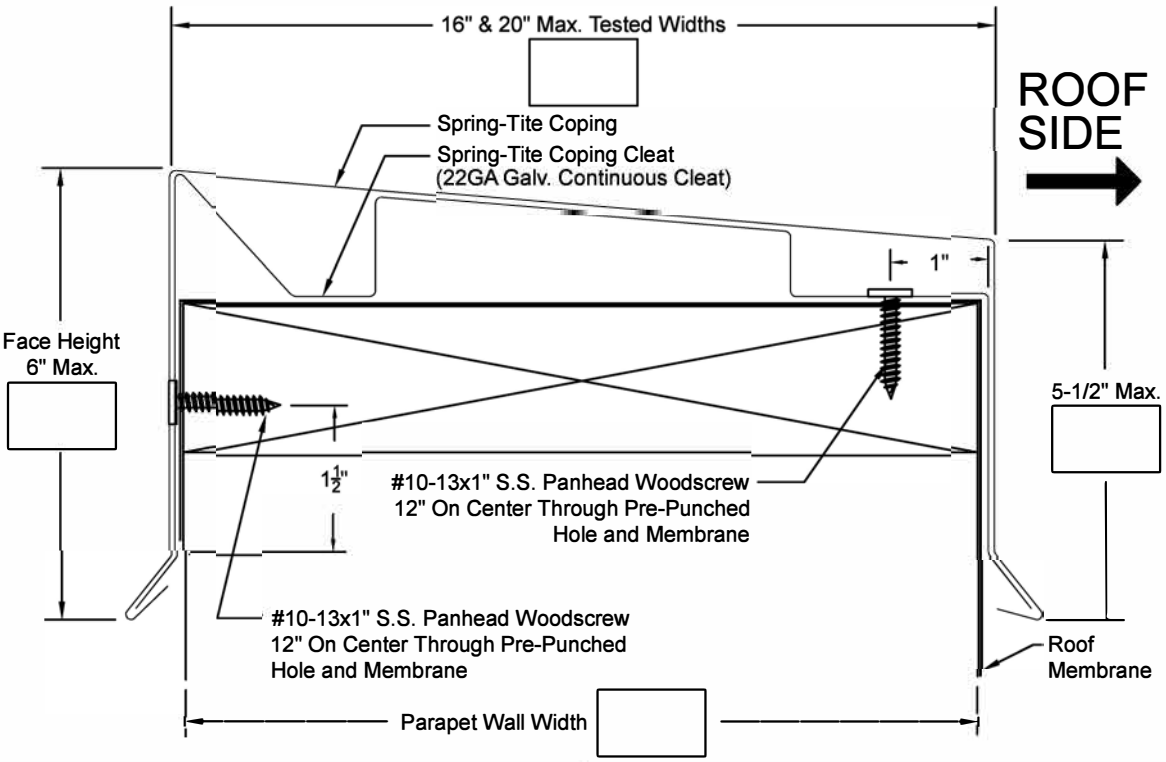

- Continuous Cleat and fasteners provided.
- Concealed Splice Plates provided.
- Splice Plate Sealant available for extra charge.

PRINT APPROVAL:

Architect and/or Contractor shall verify all dimensions, sizes, and quantities, All products to be installed in strict accordance with New Castle's printed instructions.

Approved By: _____

Date: _____

QUANTITIES:

Lineal Feet (10'-0" Lengths): _____

Outside Miters**: _____ ☐ Optional Welded (Surcharge Applies)

Inside Miters**: _____ ☐ Optional Welded (Surcharge Applies)

Right End Caps**: _____ ☐ Optional Welded (Surcharge Applies)

Left End Caps**: _____ ☐ Optional Welded (Surcharge Applies)

Splice Plate Tape Sealant: ☐ Optional Sealant (Surcharge Applies)

** Standard riveted

PROJECT:

ARCHITECT:

ROOFING CONTRACTOR:

REPRESENTATIVE:

MATERIAL:

☐ 24GA ☐ .040" AL

☐ Other: _____

Finish: _____

Color: _____

New Castle Building Products
Metal Division
600 W John St
Hicksville, NY 11801
(516) 207-7708

Effective Date:	5-1-13
Drawn By:	J.S.
Approved By:	B.P.

New Castle Metals Spring-Tite Coping EZ System

Overview

New Castle Metals Spring-Tite Coping EZ system is a two-part assembly that includes a front and rear segmented cleat and a decorative snap-on coping cover for single ply commercial roof systems. Our Sping-Tite Coping EZ is available as pre-painted Kynar500® in .040" formed aluminum and 24 gauge galvalume steel. This product features our patent pending 16-gauge (G90) "V" segmented pre-punched cleat spaced at 60" on center, is available in 12" standard cleat lengths and 10' standard coping cover lengths. Concealed splices plates and fasteners are included with the purchase of this product.

Features and Benefits

- Secures roof Membrane to Parapet Wall
- Allows for the use of high-torque screws without penetrating the top surface of the Membrane
- Pre-Punched Segmented Cleat
- ANSI-SPRI ES-1 Certified
- 110 MPH 20-Year Wind Warranty
- 35-Year Gold Standard Paint Warranty
- Corporate and Custom Colors are available

Installation

For complete installation instructions, please refer to New Castle Metals Architectural specifications and details.

REVIEW CURRENT NEW CASTLE METALS ARCHITECTURAL SPECIFICATION AND DETAILS FOR SPECIFIC INSTALLATION REQUIREMENTS.

Quality Assurance

New Castle Metals Spring-Tite Coping EZ system is tested per ANSI/SPRI Test Method RE-3 bi-directional test for wind requirements for Coping and Wall Caps. The Spring-Tite Coping EZ shall be certified by New Castle Metals to design pressures as indicated in current edition of SPRI's Wind Resistance Standard for Edge Systems used with Low Slope Roofing System. This products meets International Building Code minimum requirement.

Technical Services

Engineering and shop drawings, as well as long-form specifications and CAD details, are available from New Castle Metals. Product samples, detail sheets, color chips and color charts are also available for submittal packages. For personal assistance with questions or for full submittals, contact New Castle Metals or your local independent sales representative.

Specifications

Material	Face	Wall Width	Sustained Pressures
24 gauge	up to 6"	<16" max	-180 psf (*)
24 gauge	up to 6"	16" to 24" max	- 80 psf (*)
0.040 AL	up to 6"	<16" max	-190 psf (*)
0.040 AL	up to 6"	16" to 24" max	-100 psf (*)

* Design Engineer must apply the Factor of Safety
**ADDITIONAL GAUGES - .050 and .063 aluminum and 22 gauge Galvalume are available upon request

600 W John Street // Hicksville, NY 11801 // Phone: 516.207.7708// www.NCBPMetalRoofing.com // email: metalsales@ncbp.com

Spring-Tite Coping EZ

ANSI/SPRI ES-1 CERTIFIED: 16" - .040" Aluminum = 190 psf, 24GA Steel = 180 psf
24" - .040" Aluminum = 100 psf, 24GA Steel = 80 psf

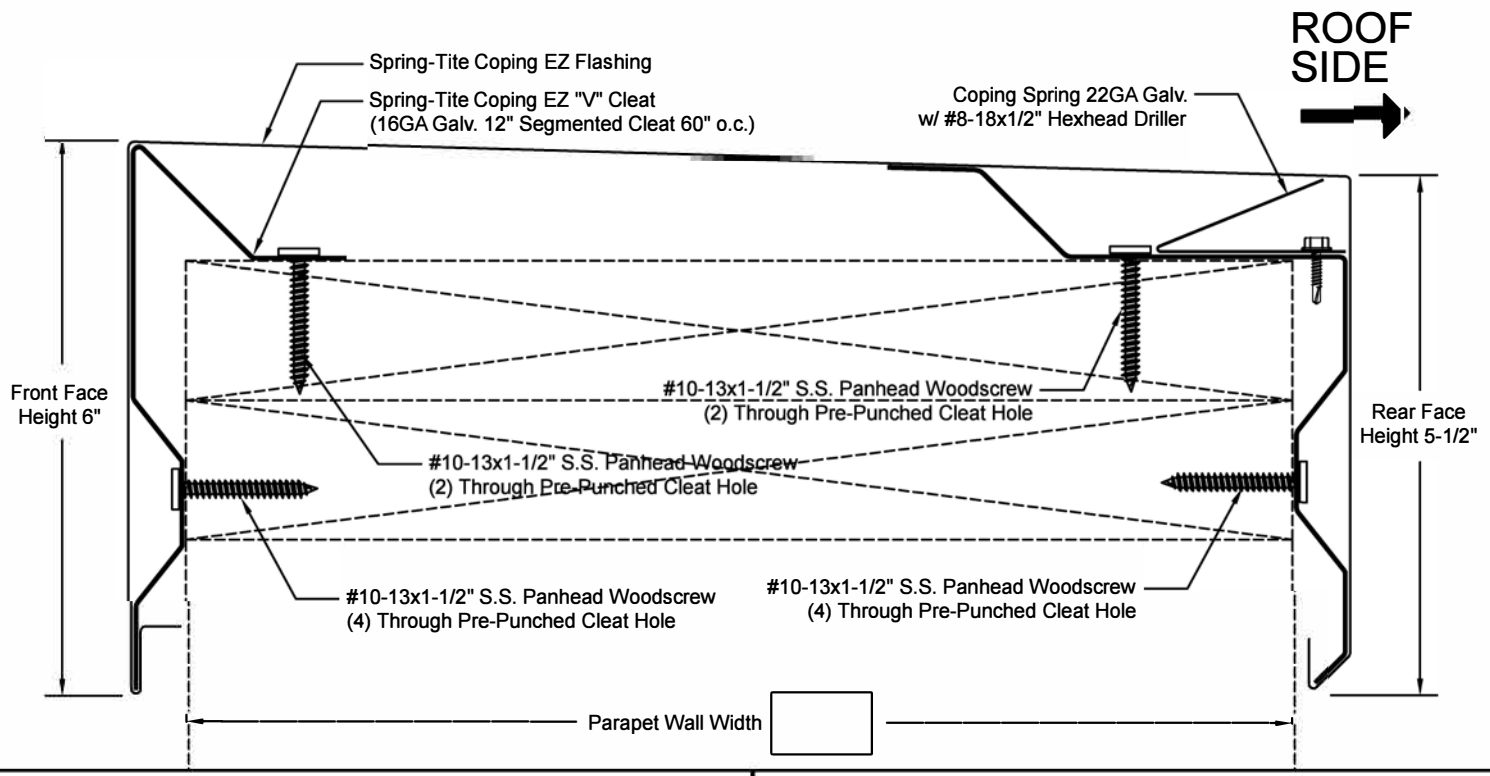

- Segmented "V" Cleat and Fasteners provided.
- Concealed Splice Plates provided.
- Splice Plate Sealant available for extra charge.

PRINT APPROVAL:

Architect and/or Contractor shall verify all dimensions, sizes, and quantities, All products to be installed in strict accordance with New Castle's printed instructions.

Approved By: _____

Date: _____

QUANTITIES:

Lineal Feet (10'-0" Lengths): _____

Outside Miters**: _____ ☐ Optional Welded (Surcharge Applies)

Inside Miters**: _____ ☐ Optional Welded (Surcharge Applies)

Right End Caps**: _____ ☐ Optional Welded (Surcharge Applies)

Left End Caps**: _____ ☐ Optional Welded (Surcharge Applies)

Splice Plate Tape Sealant: ☐ Optional Sealant (Surcharge Applies)

** Standard riveted

PROJECT:

ARCHITECT:

ROOFING CONTRACTOR:

REPRESENTATIVE:

MATERIAL:

☐ 24GA ☐ .040" AL

☐ Other: _____

Finish: _____

Color: _____

New Castle Building Products
Metal Division
600 W John St
Hicksville, NY 11801
(516) 207-7708

Effective Date:	9-22-14
Drawn By:	J.S.
Approved By:	B.P.

New Castle Metals Spring-Tite Coping LT System

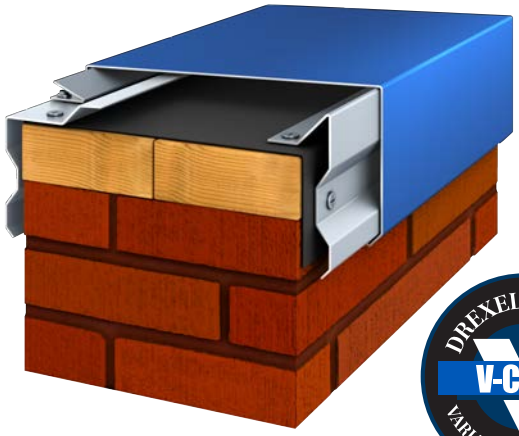

Overview

New Castle Metals Spring-Tite Coping LT system is a two-part assembly that includes a front and rear segmented cleat and a decorative snap-on coping cover for single commercial roof systems. The Spring-Tite Coping LT is available in pre-painted Kynar500® .040" formed aluminum as 24 gauge Galvalume steel. This product features our 18-gauge (G90) "V" Variable Wall segmented pre-punched cleat spaced at 60" on center and is available in 12" standard cleat lengths and 10' standard coping cover lengths. Concealed splices plates and fasteners are included with the purchase of this product.

Features and Benefits

- Secures roof Membrane to Parapet Wall
- Allows for the use of high-torque screws without penetrating the top surface of the Membrane
- Pre-Punched Segmented Cleat
- ANSI-SPRI ES-1 Certified
- 110 MPH 20-Year Wind Warranty
- 35-Year Gold Standard Paint Warranty
- Corporate and Custom Colors are available

Installation

For complete installation instructions, please refer to New Castle Metals Architectural specifications and details.

REVIEW CURRENT NEW CASTLE METALS ARCHITECTURAL SPECIFICATION AND DETAILS FOR SPECIFIC INSTALLATION REQUIREMENTS.

Quality Assurance

New Castle Metals Spring-Tite Coping LT system is tested per ANSI/SPRI Test Method RE-3 bi-directional test for wind requirements for Coping and Wall Caps. The Spring-Tite Coping LT shall be certified by Drexel Metals to design pressures as indicated in current edition of SPRI's Wind Resistance Standard for Edge Systems used with Low Slope Roofing System. This products meets International Building Code minimum requirement.

Technical Services

Engineering and shop drawings, as well as long-form specifications and CAD details, are available from New Castle Metals. Product samples, detail sheets, color chips and color charts are also available for submittal packages. For personal assistance with questions or for full submittal, contact New Castle Metals or your local independent sales representative.

Specifications

Material	Face	Wall Width	Sustained Pressures
24 gauge	up to 6"	<16" max	-160 psf (*)
24 gauge	up to 6"	16" to 24" max	- 90 psf (*)
0.040 AL	up to 6"	<16" max	- 160 psf (*)
0.040 AL	up to 6"	16" to 24" max	-100 psf (*)

* Design Engineer must apply the Factor of Safety
**ADDITIONAL GAUGES - .050 and .063 aluminum and 22 gauge Galvalume are available upon request

AUTHORIZED FABRICATOR DM-ARM

NEW CASTLE METAL

CERTIFIED INSTALLER DREXEL METALS

600 W John Street // Hicksville, NY 11801 // Phone: 516.207.7708 // www.NCBPMetalRoofing.com // email: metalsales@ncbp.com

Spring-Tite Coping LT

ANSI/SPRI ES-1 CERTIFIED: 16" - .040" Aluminum =160 psf, 24GA Steel = 160 psf
24" - .040" Aluminum = 100 psf, 24GA Steel = 90 psf

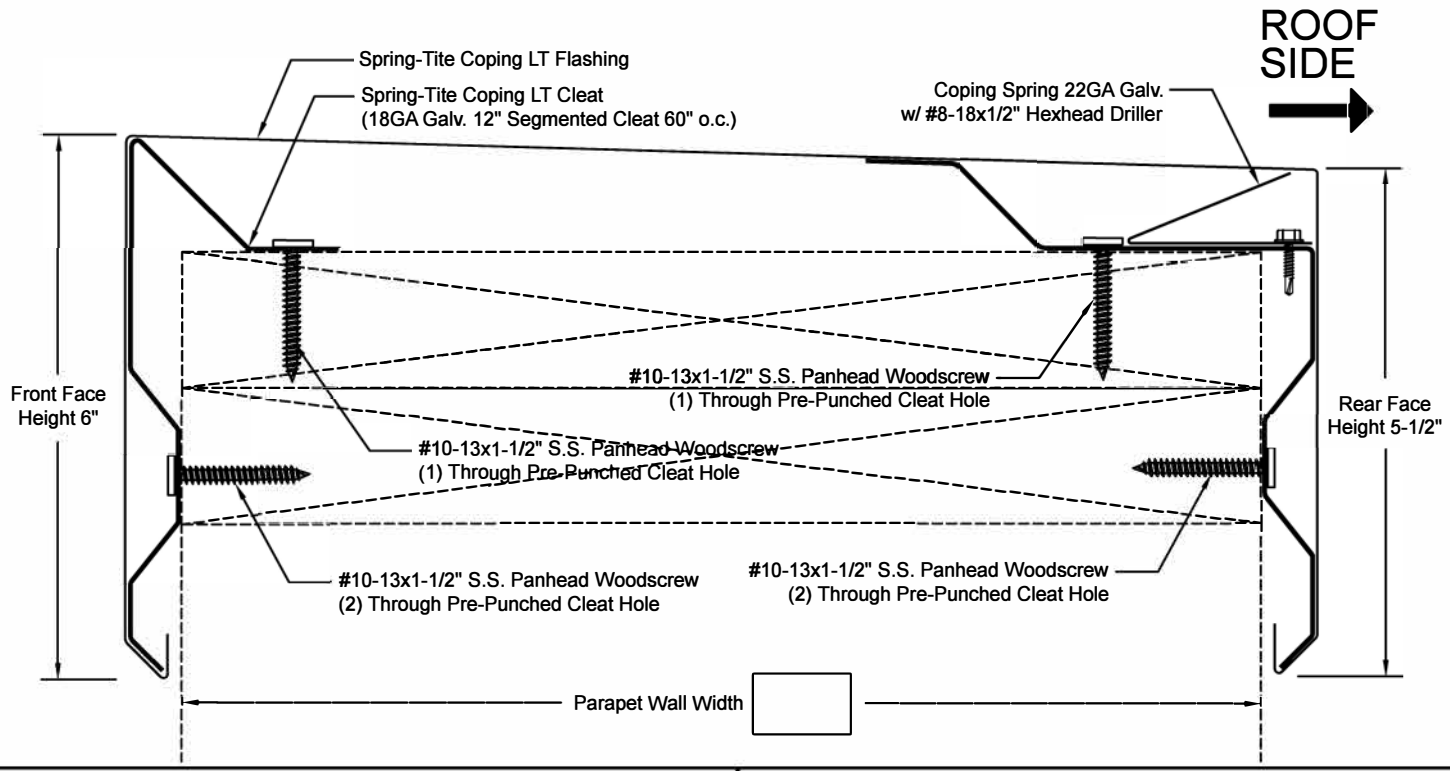

- Segmented Cleat and Fasteners provided.
- Concealed Splice Plates provided.
- Splice Plate Sealant available for extra charge.

PRINT APPROVAL:

Architect and/or Contractor shall verify all dimensions, sizes, and quantities, All products to be installed in strict accordance with New Castle's printed instructions.

Approved By: _____

Date: _____

QUANTITIES:

Lineal Feet (10'-0" Lengths): _____

Outside Miters**: _____ ☐ Optional Welded (Surcharge Applies)

Inside Miters**: _____ ☐ Optional Welded (Surcharge Applies)

Right End Caps**: _____ ☐ Optional Welded (Surcharge Applies)

Left End Caps**: _____ ☐ Optional Welded (Surcharge Applies)

Splice Plate Tape Sealant: ☐ Optional Sealant (Surcharge Applies)

** Standard riveted

PROJECT:

ARCHITECT:

ROOFING CONTRACTOR:

REPRESENTATIVE:

MATERIAL:

☐ 24GA ☐ .040" AL

☐ Other: _____

Finish: _____

Color: _____

New Castle Building Products
Metal Division
600 W John St
Hicksville, NY 11801
(516) 207-7708

Effective Date:	9-22-14
Drawn By:	J.S.
Approved By:	B.P.

Custom Edging Order Form

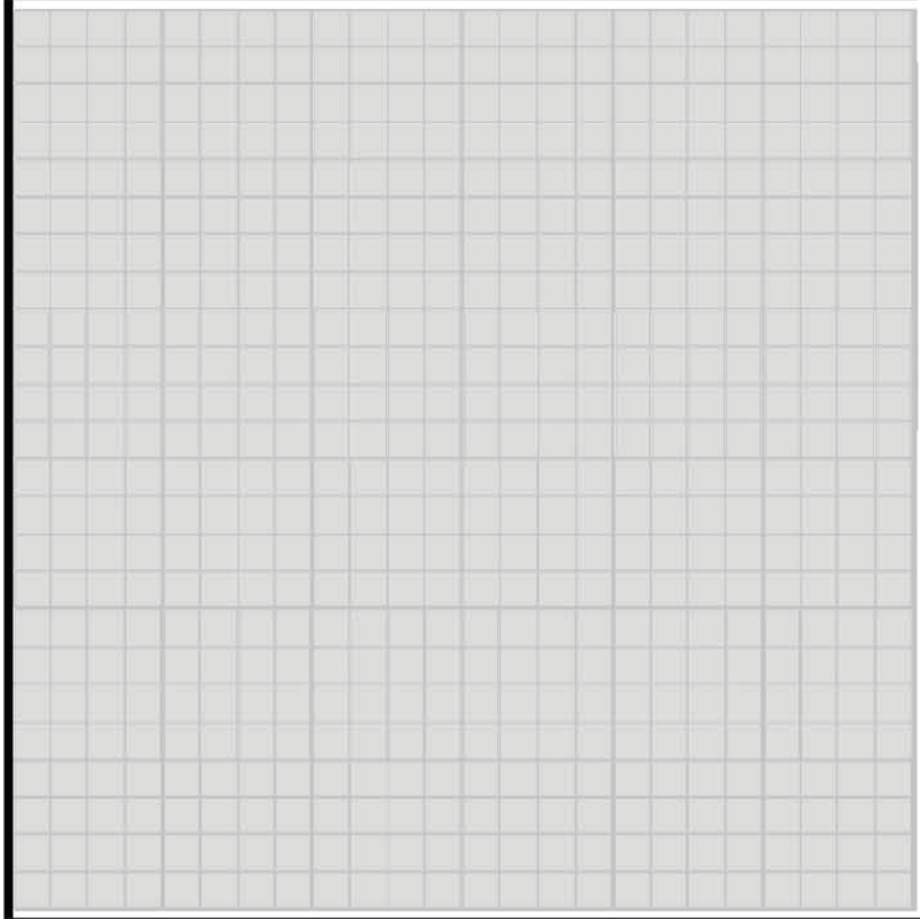

Item Description & Order Notes

☐ 0.032	☐ Kynar
☐ 0.040	☐ Mill
☐ 16 oz	☐ Copper
☐ 22 GA	☐ Galvanized
☐ 24 GA	☐ Stainless

_____

_____

_____

_____

_____

_____

☐ OTHER: MATERIAL TYPE:_____ THICKNESS:_____

PRINT APPROVAL:

ARCHITECT AND/OR CONTRACTOR SHALL VERIFY ALL DIMENSIONS, SIZES, AND QUANTITIES. FABRICATION WILL NOT BEGIN UNTIL RECEIPT OF SIGNED PRINT APPROVAL

SIGNATURE:_____

DATE:_____

PROJECT:
CONTRACTOR:
ARCHITECT:
REPRESENTATIVE:

QUANTITIES:

LINEAL FEET (10'-0" LENGTHS):_____

OUTSIDE MITERS:_____

INSIDE MITERS:_____

CLEAT:_____

SPLICE PLATES (6"):_____

EXT. SPLICE PLATES (6"):_____

NEW CASTLE METAL

NEW CASTLE BUILDING PRODUCTS

METAL DIVISION
600 W John St,
Hicksville, NY 11801

Phone: (516) 207-7708
Email: MetalSales@ncbp.com

Custom Edging Order Form

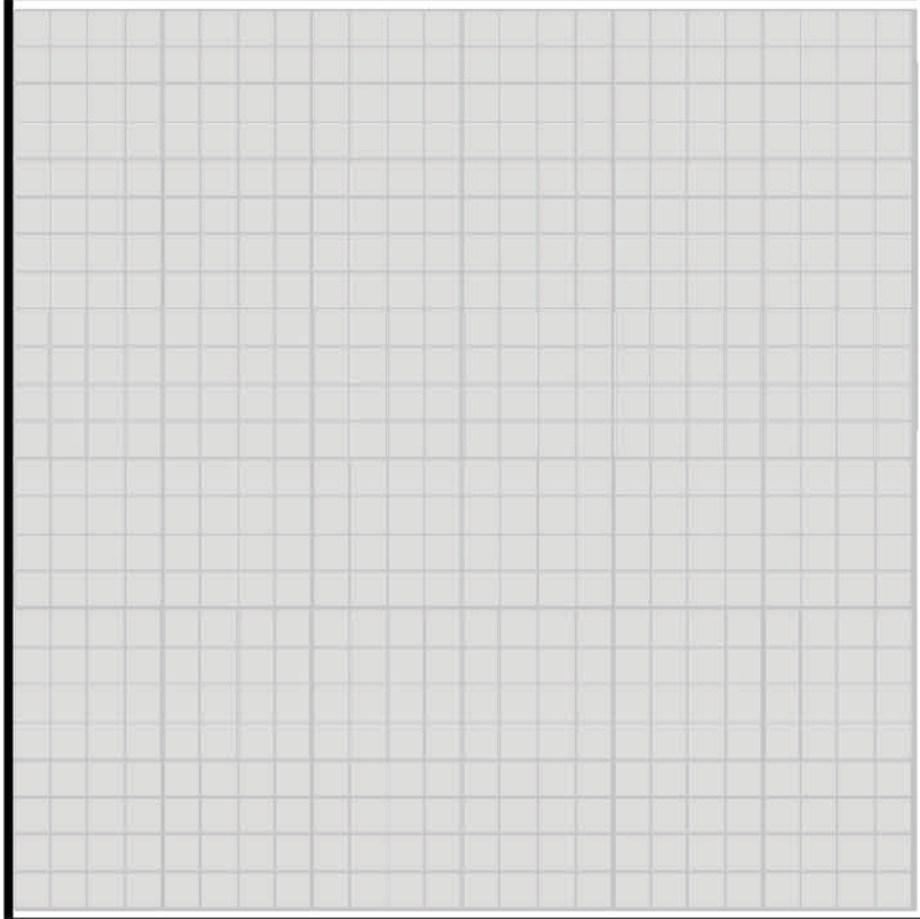

Item Description & Order Notes

☐ 0.032	☐ Kynar
☐ 0.040	☐ Mill
☐ 16 oz	☐ Copper
☐ 22 GA	☐ Galvanized
☐ 24 GA	☐ Stainless

_____

_____

_____

_____

_____

_____

☐ OTHER: MATERIAL TYPE:_____ THICKNESS:_____

PRINT APPROVAL:

ARCHITECT AND/OR CONTRACTOR SHALL VERIFY ALL DIMENSIONS, SIZES, AND QUANTITIES. FABRICATION WILL NOT BEGIN UNTIL RECEIPT OF SIGNED PRINT APPROVAL

SIGNATURE:_____

DATE:_____

PROJECT:
CONTRACTOR:
ARCHITECT:
REPRESENTATIVE:

QUANTITIES:

LINEAL FEET (10'-0" LENGTHS):_____

OUTSIDE MITERS:_____

INSIDE MITERS:_____

CLEAT:_____

SPLICE PLATES (6"):_____

EXT. SPLICE PLATES (6"):_____

NEW CASTLE METAL

NEW CASTLE BUILDING PRODUCTS

METAL DIVISION
600 W John St,
Hicksville, NY 11801

Phone: (516) 207-7708
Email: MetalSales@ncbp.com