Assembly Overview:

Spring-Tite Coping EZ Installation Guide

This guide is provided to assist you in the installation process. Additional assistance is available by calling us at 888-321-9630. Thank you for choosing Drexel Metals.

Contents:

Assembly Overview	1
Step 1: Installing 22ga Galv. Cleat	2
Step 2: Installing Miters	2
Step 3: Installing Straight Lengths	3
Step 4: Installing End Caps/Terms	3
Detail: Spring-Tite Coping EZ	4

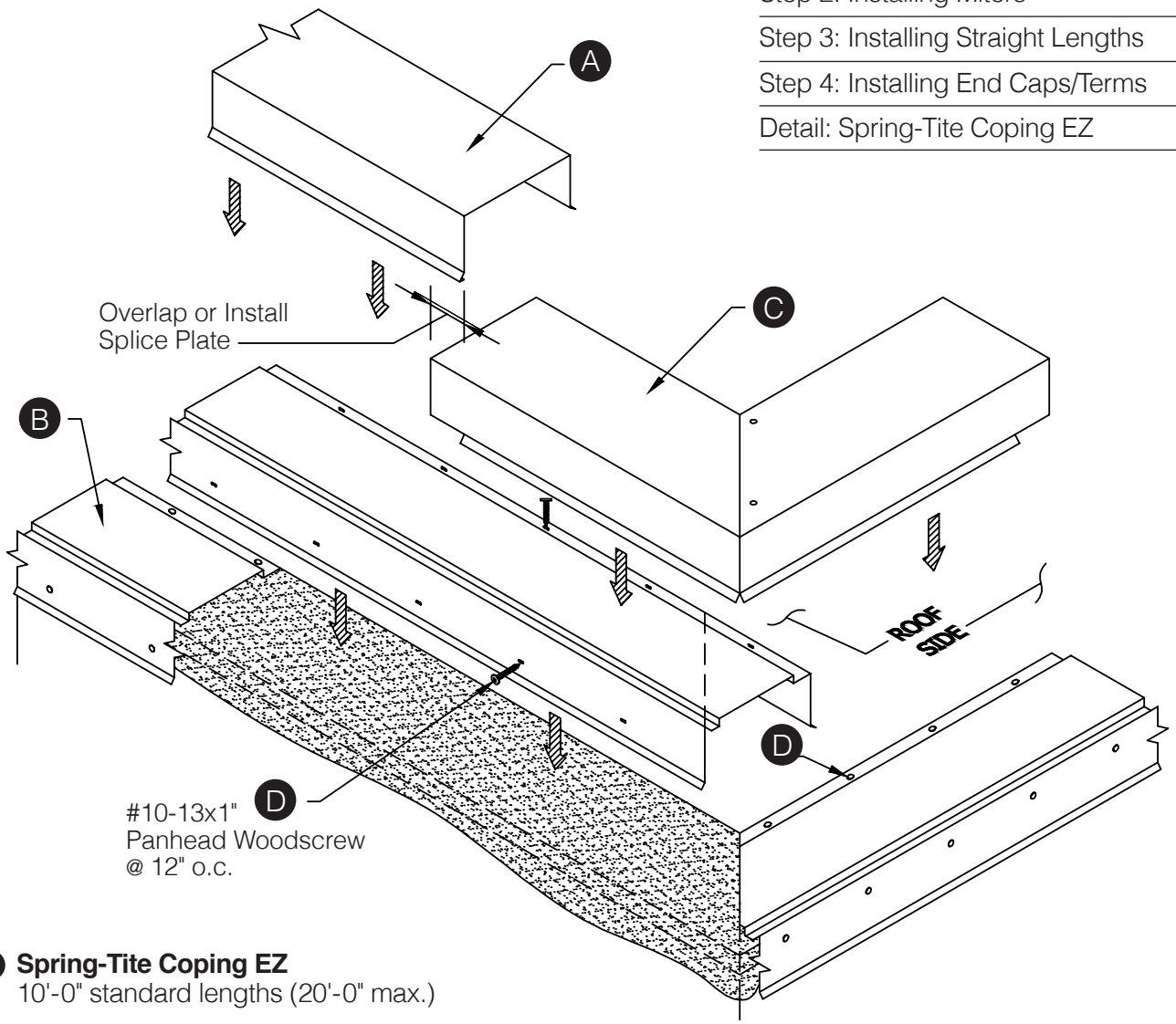

A Spring-Tite Coping EZ
10'-0" standard lengths (20'-0" max.)

B 22ga Galvanized Continuous Cleat
10'-0" lengths

C Coping Miter Cap
(Outside corner shown)

D #10-13x1" S.S. Panhead Woodscrew
at 12" o.c. (6"o.c. within 3'-0" of corners)
(Included and required)

DrexelMetals
Roofing Systems + Custom Fabrication

Step 1: Installing 22ga Galvanized Cleat

- Prior to installing the Cleat, ensure that all metal components have been isolated from ACQ treated lumber with appropriate membrane material.
- Butt Cleats together at corner conditions.
- Install Cleat working away from corners.
- Allow 1/8" gap between sections for thermal movement.
- Attach the Cleat using #10-13x1" S.S. Panhead Woodscrews provided, into each pre-punched hole.
- When within 3'-0" of corners, attach Cleat with screws at 6" on center.

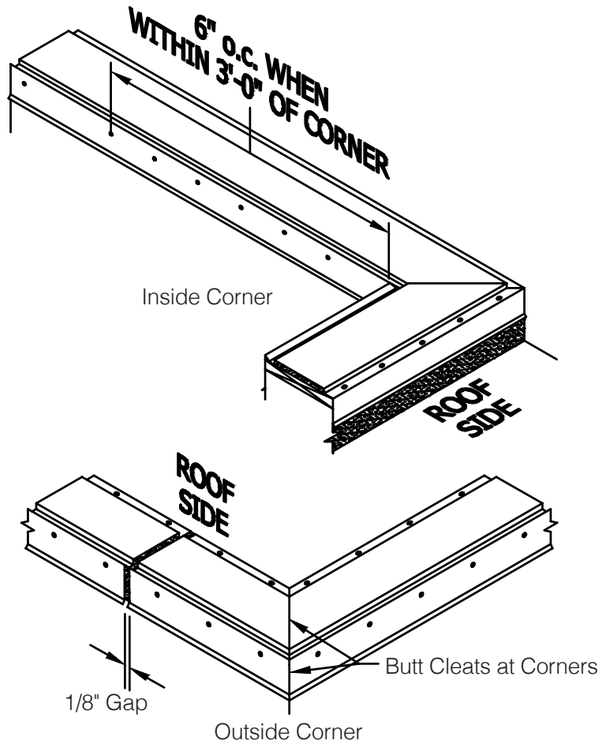

Step 2: Installing Spring-Tite Coping Miters

- Locate the Miter for the appropriate corner.
- Notch both sides of the Miter, as shown.
- Hook the drip of the Miter over the kickout of the face side of the Cleat, then rotate the Miter over the top of the parapet and snap onto the roof side of the Cleat.

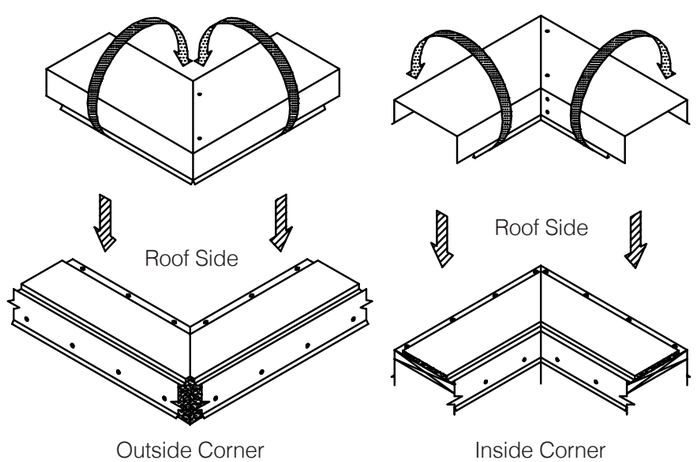

Step 3: Installing Spring-Tite Coping Straight Lengths

- Start by notching the end of the Coping opposite of the installed Miter.
- Install the Coping by hooking the drip over the kickout on the face side of the Cleat and rotating the Coping over the parapet wall and hooking onto the roof side of the 22ga Continuous Cleat.
- Consider lengths of all straight pieces prior to cutting to avoid creating relatively short sections adjacent to one another.

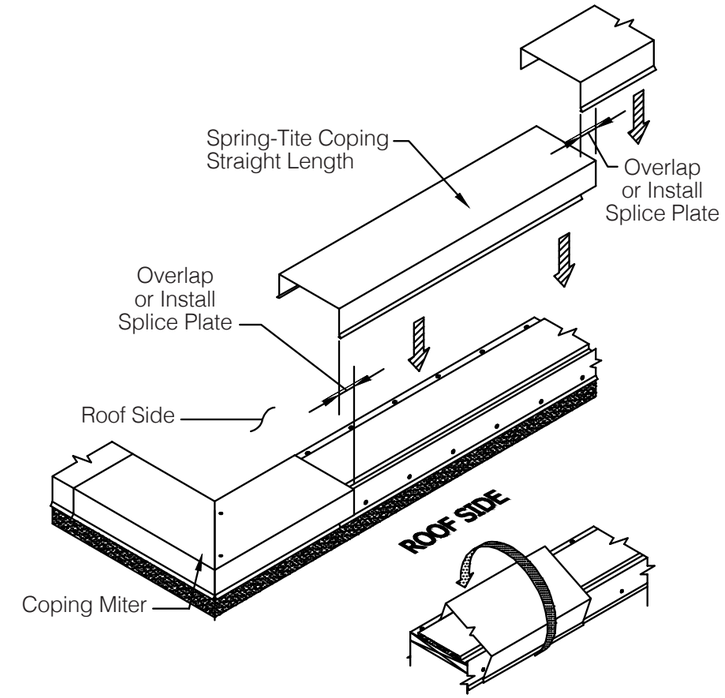

Step 4: Installing Spring-Tite Coping End Caps/Terms

- Pop-rivet the End Cap and End Term inserts into place.
- Install End Caps and End Terms by hooking the drip over the kickout on the Cleat and rotating over the part over the parapet.
- End Caps and End Terms must be restrained from moving by securing with a minimum of (2) #10-13x1" S.S. Panhead Woodscrews through the roof side leg.

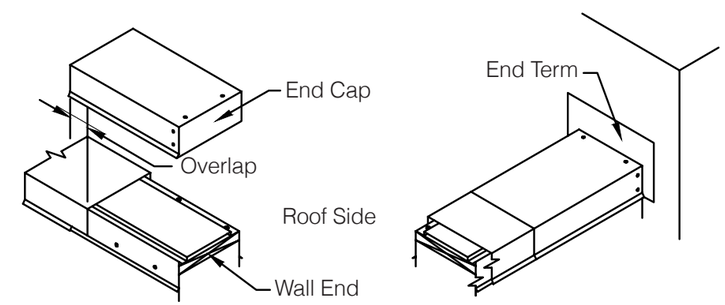

Typical Notch Procedure

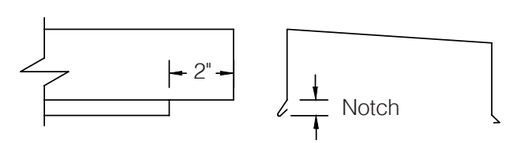

Detail: Spring-Tite Coping EZ

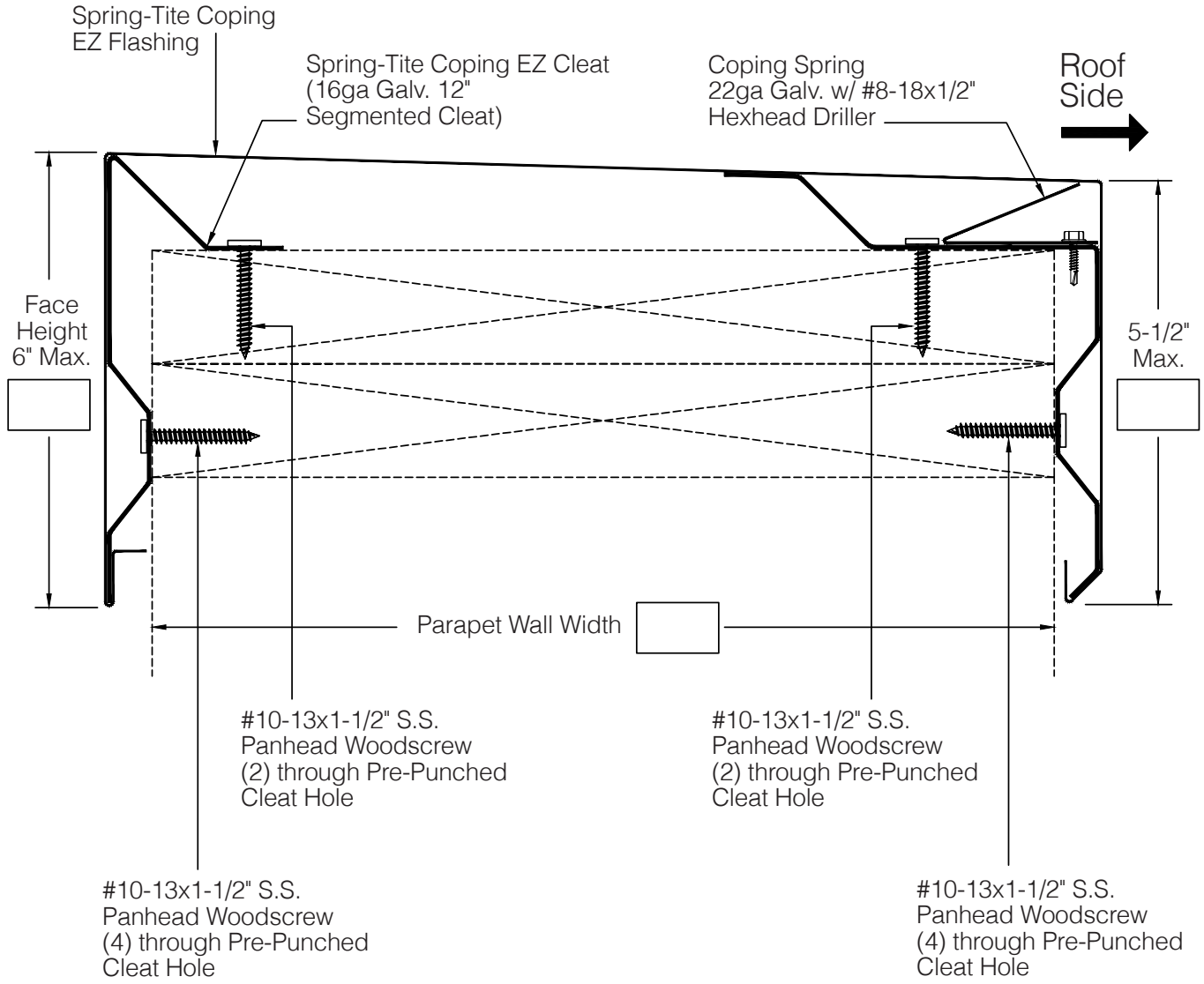

Notes:

1. Isolate all metal parts from ACQ treated wood or other galvanically incompatible material with appropriate membrane material.
2. Appliance attachments, such as lightning rods, signs, or antennae that penetrate the water seal, induce a galvanic reaction, or otherwise compromise the effectiveness of the roof edge system, shall be eliminated or isolated to prevent problems per section 8.0 if ANSI/SPRI ES-1. Appliances should also be isolated from, or not attached to, the roof edge system. Consult the lightning protection system manufacturer for specific attachment instructions.

DrexelMetals
Roofing Systems + Custom Fabrication
www.drexelmetals.com

1234 Gardiner Lane, Louisville, KY 40213
888-321-9630 toll-free • 502-690-6174 fax

©2014 Drexel Metals, Inc. All rights reserved.